版 本	变 更 内 容	工程确认	日 期

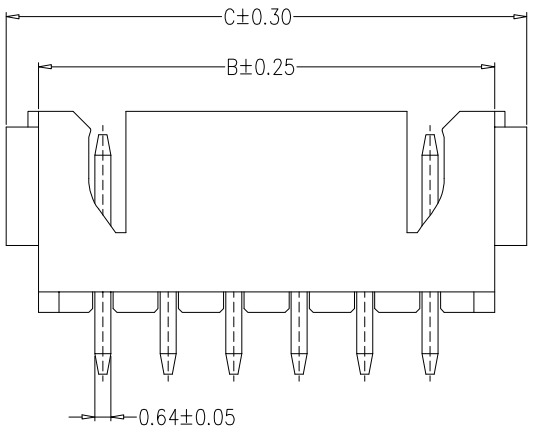

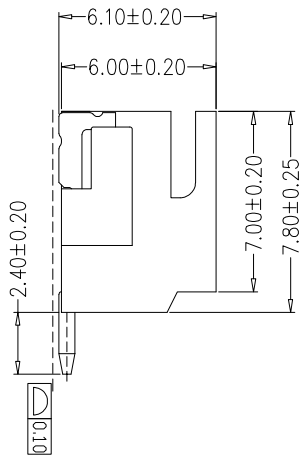

SPECIFICATIONS

1、Current Rating: 3A AC, DC
2、Voltage Rating: 250V AC, DC
3、Temperature Range: -25℃~+85℃
4、Contact Resistance: 20MΩ Max
5、Insulation Resistance: 1000MΩ Min
6、Withstanding Voltang: 1000V AC/minute
7、Material: Wafer LCP、PA6T、UL94V-0
PIN Brass Tin-plated
Soldier tad bronze Tin-plated

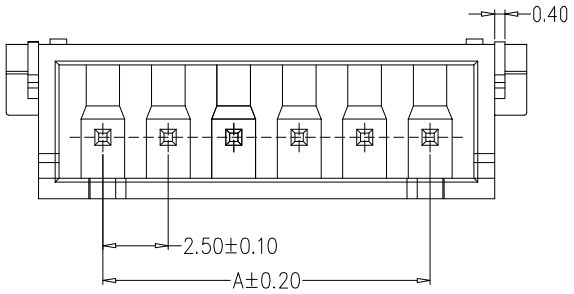

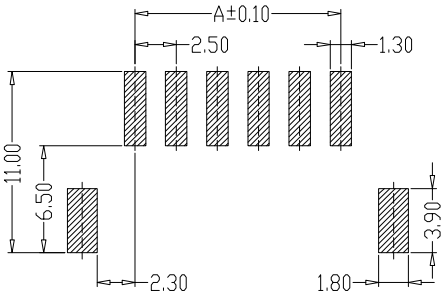

PCB LAYOUT

编 号	尺寸（mm）		
	A	B	C
YTC-A2501WF-02A	2.50	7.50	10.00
YTC-A2501WF-03A	5.00	10.00	12.50
YTC-A2501WF-04A	7.50	12.50	15.00
YTC-A2501WF-05A	10.00	15.00	17.50
YTC-A2501WF-06A	12.50	17.50	20.00
YTC-A2501WF-07A	15.00	20.00	25.00
YTC-A2501WF-08A	17.50	22.50	25.00
YTC-A2501WF-09A	20.00	25.00	27.50
YTC-A2501WF-10A	22.50	27.50	30.00
YTC-A2501WF-11A	25.00	30.00	32.50
YTC-A2501WF-12A	27.50	32.50	35.00
YTC-A2501WF-20A	47.50	52.50	55.00

深圳市怡远科技有限公司 SHENZHEN YIYUAN TECHNOLOGY CO.,LTD		页码 (SHEET)	1/1
		版本 (REV)	A1
		日期 (DATE)	2021.10.12
品名 (ITEM NO)	2.5间距卧贴 WAFER DIP TYPE	设计 (DESIGN)	LUO
料号 (PART NO)	YTC-A2501WF-**A	审核 (CHECKED)	ROGER LI
图号 (DWG NO)		核准 (APPROVED)	ROC ZHAO

单位(UNIT): MM
比例(SCALE)

GENERL TOLERANCE
X.±0.25 X.°±2°
.X±0.20 .X°±1°
.XX±0.15 .XX°±0.5°
.XXX±0.10 .XXX°±0.5°

These drawings and specifications are Shenzhen Yiyuan Technology Co Ltd.The property should not be copied. Without Shenzhen Yiyuan Technology Co. Ltd.Prior written consent to copy or use in any way. Email at info@yiyuanswitches.com