THIS DRAWING IS UNPUBLISHED. RELEASED FOR PUBLICATION 20
© COPYRIGHT 20 BY - ALL RIGHTS RESERVED.

REVISIONS

P	LTR	DESCRIPTION	DATE	DWN	APVD
	A	Initial Release	10OCT2017	V.G	I.Y

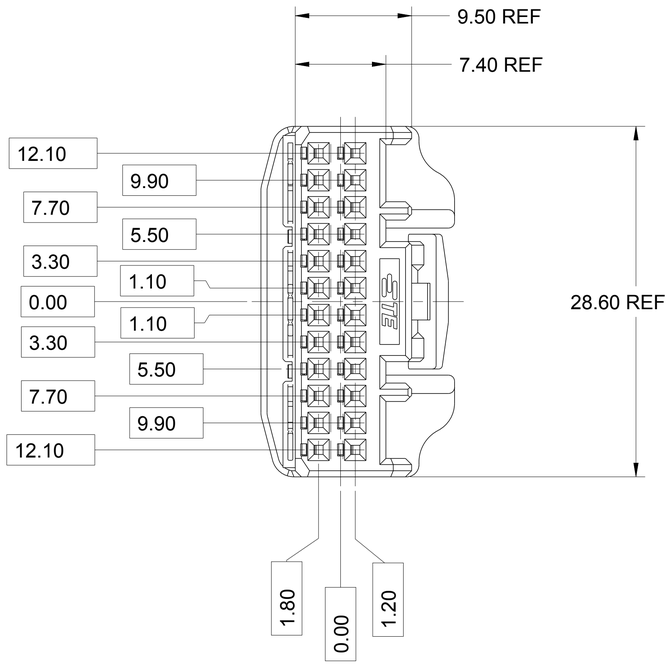

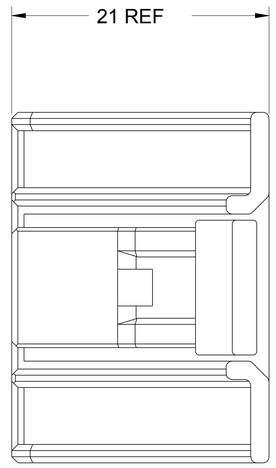

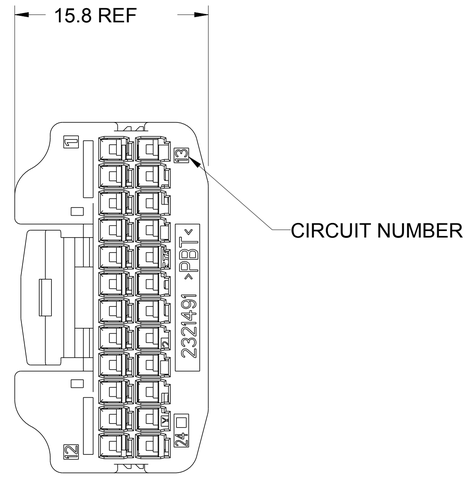

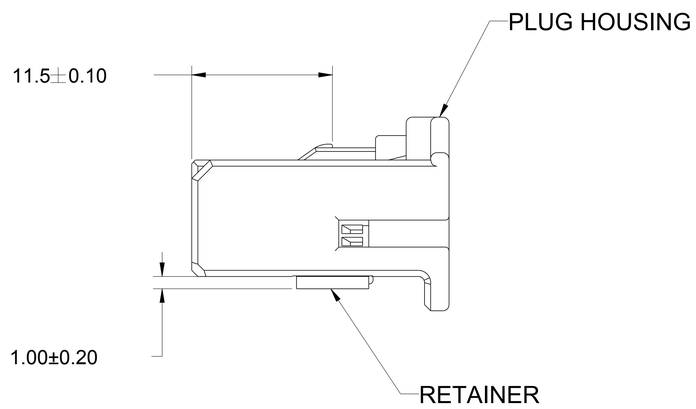

TABLE-1

POS	CAP ASSEMBLY
24	1318853-1

TABLE-2

		TERMINAL NO	APPLICABLE WIRE RANGE
SIGNAL 025	TIN	1123343-1	AVSS/CAVUS 0.3~0.5mm2 AVSSH-f 0.3~0.5mm2 CAVS 0.22~0.5mm2

NOTES:

1. RETAINER SHOULD BE SET TO THE PRE-ASSEMBLY POSITION WITHIN THE PLUG HOUSING WHEN SHIPPED TO THE CUSTOMER
2. THE RETENTION LATCH OF THE RETAINER MUST BE OUT SIDE OF PLUG HOUSING WHEN PRE-ASSEMBLY
3. RETAINER RETENTION FORCE FROM HOUSING:20N MIN
4. INSTRUCTION SHEET NO:411-5928
5. PART NUMBER OF CAP HOUSING TO BE MATED:SEE TABLE-1
6. APPLIED TERMINAL:SEE TABLE-2
7. RETAINER IS THE SAME COLOR AS HOUSING.

TABLE-3

PAPER BOX	PLASTIC BAG	BLACK 7	2321519-2
PAPER BOX	PLASTIC BAG	NATURAL 7	2321519-1
OUTER	INNER	COLOR	PART NUMBER
PACKING STYLE			

THIS DRAWING IS A CONTROLLED DOCUMENT.

DIMENSIONS: mm

TOLERANCES UNLESS OTHERWISE SPECIFIED: Tolerance=±0.3
0 PLC ±-
1 PLC ±0.1
2 PLC ±0.01
3 PLC ±0.001
4 PLC ±-
ANGLES ±3°

MATERIAL: PBT -
FINISH: SEE TABLE-3 -

DWN V.G 17SEP2017
CHK SY.W 10OCT2017
APVD I.YIN 10OCT2017
PRODUCT SPEC 108-5668
APPLICATION SPEC 114-5250
WEIGHT 3.68g

TE Connectivity

NAME 025 SERIES 24POSITION PLUG HOUSING ASSEMBLY -

SIZE A1 | CAGE CODE 00779 | DRAWING NO C-2321519 | RESTRICTED TO -

CUSTOMER DRAWING | SCALE 4:1 | SHEET 1 OF 1 | REV A

4805 (3/13)