序号/RevNo.	名称/Title	文件编号/File No.
1	XY300V端子	QJ/XYT-2124101
2	XY300弹片	QJ/XYT-2124102
3	XY300螺丝	QJ/XYT-2124103
4	XY300V-A塑件	QJ/XYT-2124104

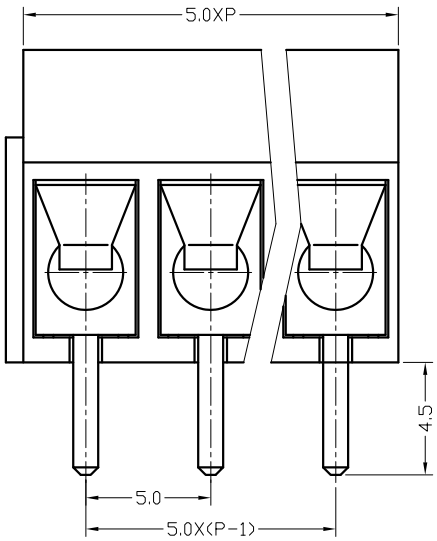

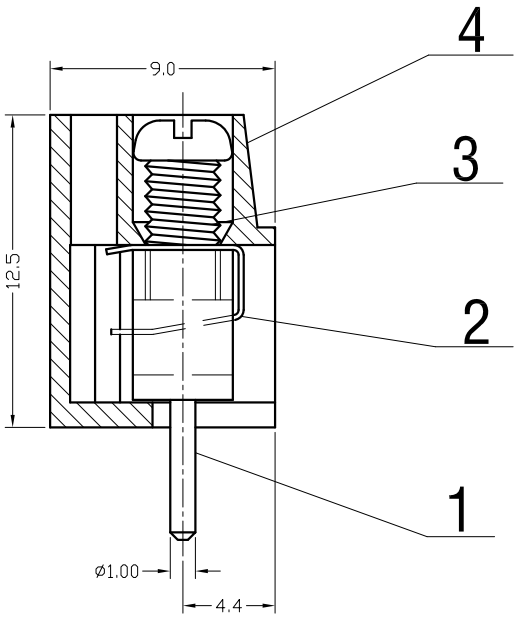

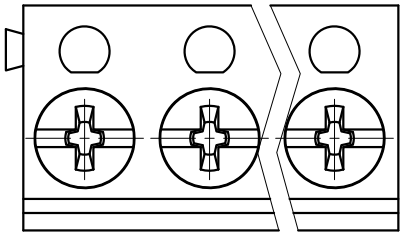

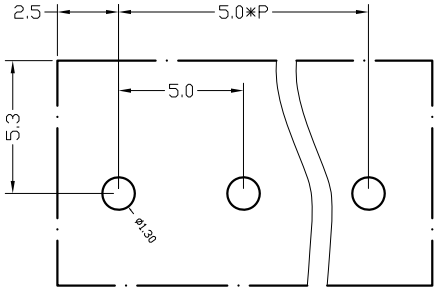

PCB LAY OUT

300V 10A 22-14AWG 2.5mm ^{2}

Poles:2P

Pitch: 5.0mm(.197")

Materials

Housing: PBT(UL 94-0)

Wire Protector: Stainless Steel

Solder Pin: Brass,Tin Plated

Screw: M3,Steel(A3),Zinc Plated

Torque: 0.5N.m

设计/Designed by	绘图/Drawing by	审核/Checked by	批准/Approved by	未注公差 General Tolerance
				x. ±0.2 x.° ±2°
新莱亚电子 XINLAIYA ELECTRONIC CO.,LTD		图名/Title XY300VA-5.0 产品图	文件编号/File No. QJ/XYT-2224100	.x ±0.1 .x° ±1°
			页序/Sheet	.xx ±0.05 .xx° ±0.5°
		备注/Remark		.xxx ±0.01
				单位/Units: mm

序号/RevNo.	更改记录/Revision note	签名/Signature	日期/Date