STARWAVE

SWPM102 Low Power Programmable Oscillator,1MHz to 180MHz

■Feature:

- Any frequency between 1 MHz and 180 MHz accurate to 6 decimal places
- 100% pin-to-pin drop-in replacement to quartz-based XO
- Excellent total frequency stability as low as ±20 ppm
- Low power consumption of 4.5 mA typical at 1.8 V
- VDD supply range:1.62V to 3.63V
- Best Shock Robustness：withstand at least 50,000 g shock
- Standby mode for longer battery life
- Fast startup time of 5 ms
- LVCMOS/HCMOS compatible output
- RoHS and REACH compliant, Pb-free, Halogen-free and Antimony-free
- Industry-standard packages: 2.0x1.6, 2.5 x 2.0, 3.2 x 2.5 mm x mm

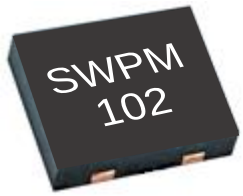

KEY FEATURES

- Quartz-free and MEMS-free without mechanical moving parts
- CMOS compatible output
- Available with frequencies from 1MHz to 180MHz
- Low jitter: 1.3 ps Typ RMS (12 kHz – 20 MHz bandwidth)
- Temperature stability:
  - ± 20 ppm (-40 to 85°C)
  - ± 25 ppm (-40 to 105°C)
  - ± 50 ppm (-40 to 125°C)
  - ± 50 ppm (-55 to 125°C)
- Integrated LDO for on-chip power supply noise filtering
- Support continuous 1..62V to 3.63V V_{DD} supply operation
- Industrial standard packages：2.0x1.6，2.5x2.0，3.2x2.5 mm x mm

APPLICATIONS

- DVR, IP CAM, Tablets, SSD, PLC,
- Industrial control, Power equipment,
- Household appliances，New energy,
- Health Medical，Data centers, Servers，etc.

1.System Block Diagram

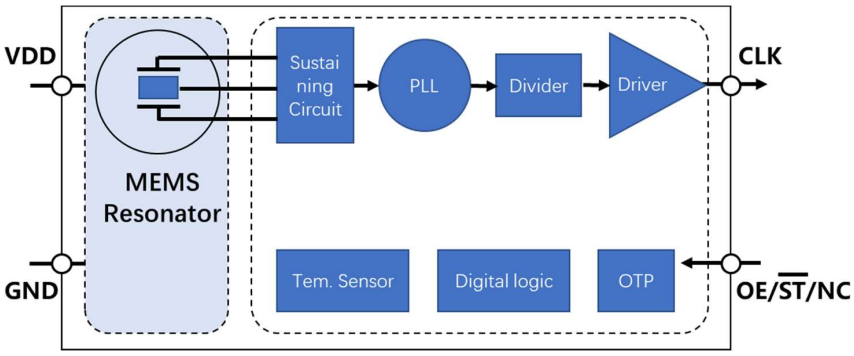

Figure 1. SWPM0102 Block Diagram

2.Pin Configuration：

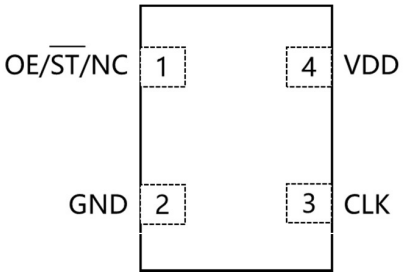

Figure 2. Pin Assignments SMD Package (Top View)

Pin #	Descriptions
1	*Selectable via ordering option* OE = Output Enable ST = Standby NC = No Connect
2	GND = Ground
3	CLK = Clock output
4	VDD = Power supply

3. Ordering Guide

The SWPM102 Oscillator supports options including frequency and OE/ACT pin, as shown in the chart below. Specific device configurations are programmed into the part at time of shipment, and samples are available in 1 weeks.

XO Series	Description
SWPM102	CMOS Oscillator

	Temperature Grade
C	-20 to 70 °C
I	-40 to 85 °C
E	-40 to 105 °C
W	-40 to 125 °C

	Frequency Stability
1	± 20ppm
2	± 25ppm
8	± 30ppm
3	± 50ppm

SWPM102	C	A	I	XX	A	1	—	1	2	5	.	0	0	0	0	0	0	E

	Package
C	3225
D	2520
E	2016

	Pin#1
A	OE
S	ST
N	NC

Frequency Code[3]
xxx.xxxxxx

Tape and Reel	Package Qty
E	1000
D	3000
<blank>	Sample

	Device Type
A	General
X[1]	Factory defined setting

Supply Voltage			
18	1.8V ±10%	30	3.0V ±10%
25	2.5V ±10%	33	3.3V ±10%
28	2.8V ±10%	YY	1.62V~ 3.63V

Notes:

1. “X” refers to the ID for the unique configuration with factory-defined settings, the value ranges from “A” to “F”.
2. Contact starwavecorp.com/contact-us for advanced -40~125°C option.
3. For example: 125 MHz = 125.000000; 33.33333 MHz = 33.333330.

4. Electrical Specifications

Table 2.1. Electrical Specifications

Parameters	Symbol	Min.	Typ.	Max.	Unit	Condition
Output Frequency Range	F	1	-	180	MHz	
Frequency Stability	F_stab	-20	-	+20	ppm	Inclusive of initial tolerance at +25°C, 1st year aging at+25°C, and variations over operating temperature, rated power supply voltage and load.
		-25	-	+25	ppm	
Operating Temperature range	T_use	-20	-	+70	℃	Commercial
		-40	-	+85		Industrial
		-40	-	+105		Extended Industrial
		-40	-	+125		Automotive Level *Please contact us
		-55		+125		Extreme temperature *Please contact us
Supply Voltage	VDD_1.8	1.62	1.8	1.98	V	
	VDD_2.5	2.25	2.5	2.75		
	VDD_2.8	2.52	2.8	3.08		
	VDD_3.0	2.7	3.0	3.3		
	VDD_3.3	2.97	3.3	3.63		
	VDD	1.62	-	3.63		
Current Consumption	Idd	-	+4.9	-	mA	No load condition, F = 20 MHz, VDD = +2.8V to 3.3 V
		-	+4.5	-		No load condition, F = 20 MHz, VDD = +2.5V
		-	+4.2	-		No load condition, F = 20 MHz, VDD = +1.8V
OE Disable Current	I_OD	-	+4.8	-	mA	VDD= +2.5V to +3.3V, OE = GND, Output in high-Z state
		-	+4.5	-		VDD= +1.8V, OE = GND, Output in high-Z state
Standby Current	I_std	-	+1.5	-	µA	$\overline{ST}$ = GND, VDD = +2.8V to +3.3V, Output is pulled down
		-	+0.8	-		$\overline{ST}$ = GND, VDD = +2.5V , Output is pulled down
		-	+0.6	-		$\overline{ST}$ = GND, VDD= +1.8V, Output is pulled down
Duty Cycle	DC	45	50	55	%	All VDD
Output Low Voltage	V_{OL}	-	-	VDD×0.1	V	IOL = 4 mA (VDD_3.0 and VDD_3.3)
Output High Voltage	V_{OH}	VDD×0.9	-	-	V	IOH = -4 mA (VDD_3.0 and VDD_3.3)
Rise and Fall Time	Tr, Tf	-	1.7	-	ns	VDD = +2.5V, +2.8V, +3.0V or +3.3V, 20% to 80%
		-	2.2	-		VDD =+1.8V, 20% to 80%
		-	1.9	-		VDD = +2.25V to +3.63V, 20% to 80%
Input Low Voltage	VIL	-	-	VDD×0.3	V	Pin 1, OE or $\overline{ST}$
Input High Voltage	VIH	VDD×0.7	-	--	V	Pin 1, OE or $\overline{ST}$
Start-up Time	T_start	-	5.0	--	ms	Measured from the time VDD reaches its rated minimum value
Enable and Disable Time	T_oe	-	-	130	ns	F=180MHz.For other frequencies, T_oe = 100 ns + 3×cycles
Resume Time	T_resume	-	5.0	-	ms	Measured from the time ST pin crosses 50% threshold
RMS Period Jitter	T_jitt	-	2.2	-	ps	F = 75 MHz, VDD = +2.5V, +2.8V, +3.0V or +3.3V
		-	2.8	-	ps	F = 75 MHz, VDD = +1.8V
Peak-to-peak Period Jitter	T_pk	-	23.3	-	ps	F = 75 MHz, VDD = +2.5V, +2.8V, +3.0V or +3.3V
		-	28.5	-	ps	F = 75 MHz, VDD = +1.8V
RMS Phase Jitter ·	T_phj	-	0.5	-	ps	F= 75 MHz, Integration bandwidth = 900kHz to 7.5 MHz

5.Test Circuit and Waveform

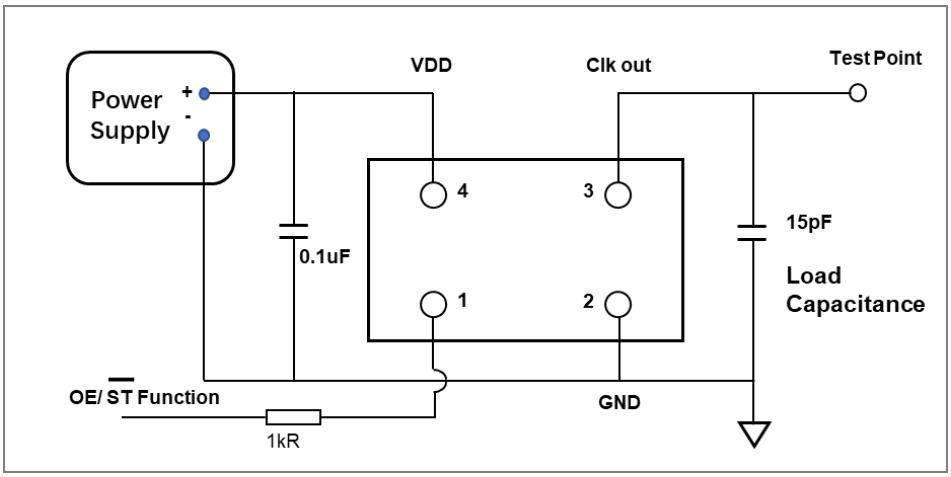

图 3. 测试回路

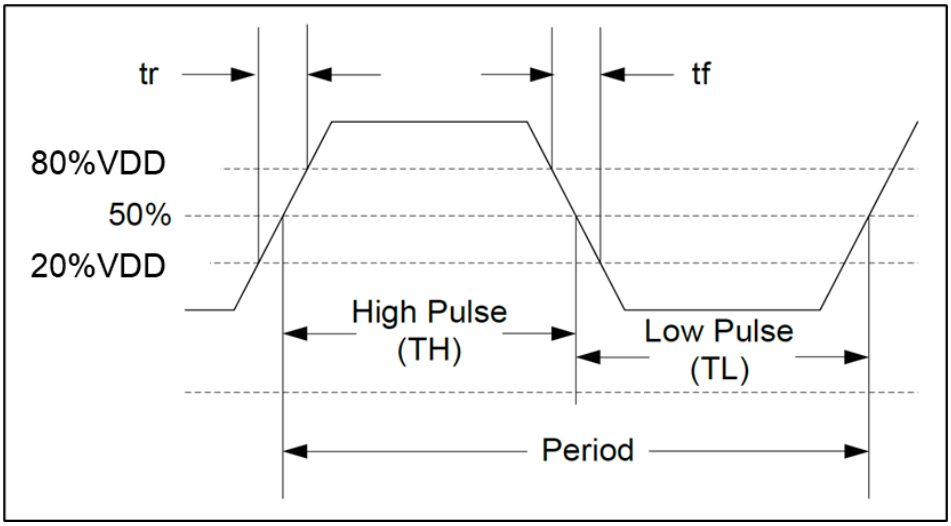

Condition

(1) Oscilloscope

The bandwidth should be minimum 5 times wider than measurement frequency.

The probe ground should be placed closely to the test point and the lead length should be as short as possible.

(2) Load Capacitance includes probe capacitance.

(3) A 0.1 μF bypass capacitor should be connected between VDD and GND pins located close to the device.

(4) Power Supply

Power supply impedance should be as low as possible and GND line should be as short as possible.

6.Reflow Profiles

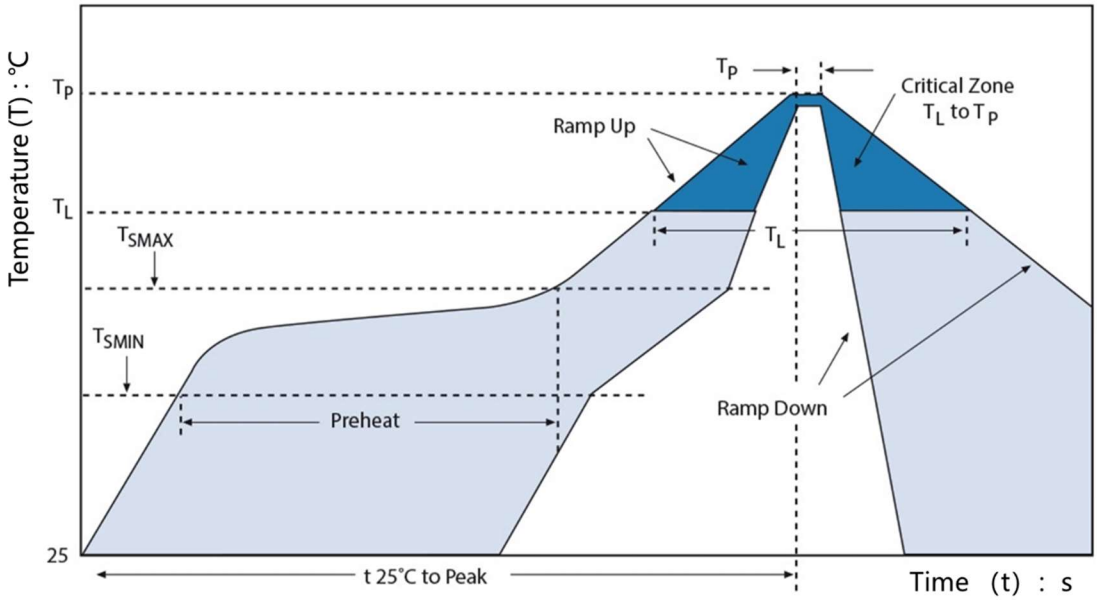

Figure 5. Reflow Soldering Profile

IPC/JEDEC Standard	IPC/JEDEC J-STD-020
T_S MAX to T_L (Ramp-up Rate)	3°C/second Maximum

Notes:

The solder reflow profile shown in Figure 5 is IPC/JEDEC J-STD-020 compliant and applies to all STAR products and packages. The relevant details of the profile please check the Standard document. An optimized reflow profile depends on several factors such as the solder paste, board density, and type of reflow equipment used.

7.1/1 Dimensions and Patterns

The figure below illustrates the package details for the SWPM102. The table below lists the values for the dimensions shown in the illustration.

Package Size-Dimensions (Unit: mm)	Recommended Land Pattern(unit: mm)
2.0 x 1.6 x 0.75 mm	

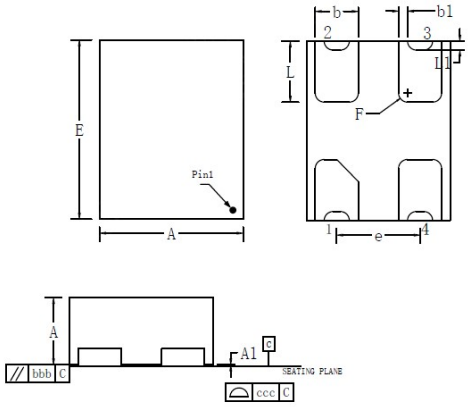

		SYMBOL	MIN	NOM	MAX
PKG thickness		A	0.7000	0.7500	0.8000
STAND OFF		A1	0	0.0200	0.0500
Body Size	X	D		1.600 BSC	
	Y	E		2.000 BSC	
Lead Width		b	0.4300	0.4800	0.5300
		b1	0.0500	0.0100	0.1500
Lead Length		L	0.5800	0.6800	0.7800
Lead Pitch		e		0.930 BSC	
RADIUS		F		0.100 REF	
PKG TOLERANCE		aaa		0.0500	
MOLD FLATNESS		bbb		0.1000	
COPLANARITY		ccc		0.0800	

NOTES

1、Dimensioning and tolerance conform to ASME Y14.5-2009

2、All dimensions are in millimeters

TITLE 4L PQFN 2.0*1.6*0.75mm	DWG NO.	
	POD-PQFN-001-M2016-001	
	REV.	SHEET
DATE 24-OCT-2023	A01	1 OF 2

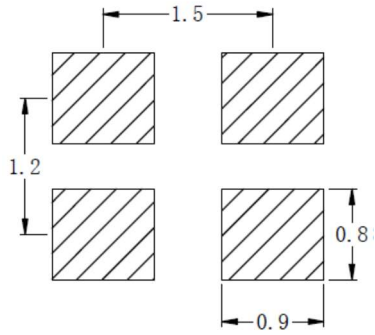

2.5 x 2.0 x 0.75 mm

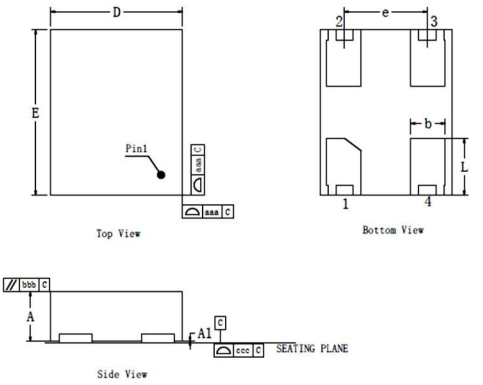

		SYMBOL	MIN	NOM	MAX
PKG thickness		A	0.7000	0.7500	0.8000
STAND OFF		A1	0	0.0200	0.0500
Body Size	X	D		2.000 BSC	
	Y	E		2.500 BSC	
Lead Width		b	0.4500	0.5000	0.5500
Lead Length		L	0.6500	0.7500	0.8500
Lead Pitch		e		1.25 BSC	
PKG TOLERANCE		aaa		0.0500	
MOLD FLATNESS		bbb		0.1000	
COPLANARITY		ccc		0.0800	

NOTES

1、Dimensioning and tolerance conform to ASME Y14.5-2009

2、All dimensions are in millimeters

TITLE 4L PQFN 2.5*2.0*0.75mm	DWG NO.	
	POD-PQFN-001-M2520-001	
	REV.	SHEET
DATE 24-OCT-2023	A01	1 OF 2

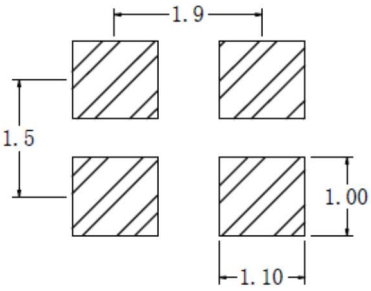

7.1/2 Dimensions and Patterns

The figure below illustrates the package details for the SWPM102. The table below lists the values for the dimensions shown in the illustration.

Package Size-Dimensions (Unit: mm)	Recommended Land Pattern(unit: mm)
3.2 x 2.5 x 0.75 mm	

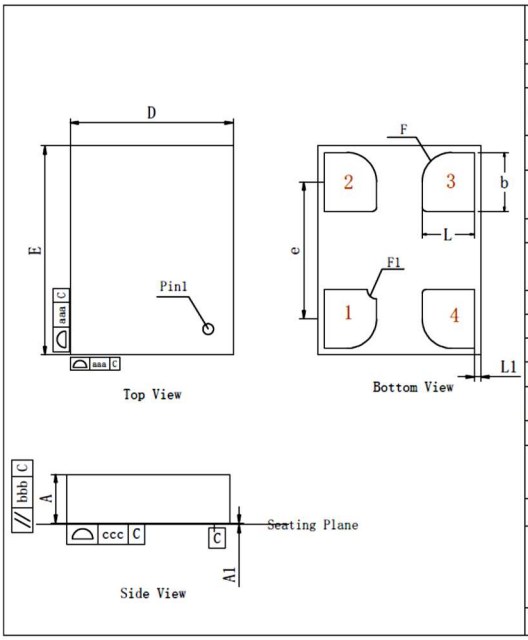

		SYMBOL	MIN	NOM	MAX
PKG thickness		A	0.7000	0.7500	0.8000
STAND OFF		A1	0	0.0200	0.0500
Body Size	X	D	2.500 BSC		
	Y	E	3.200 BSC		
Lead Width	b	b	0.8000	0.9000	1
Lead Length		L	0.7000	0.8000	0.9000
		L1	0.1 REF		
Lead Pitch		e	2.10 BSC		
Radius		F	0.45 REF		
		F1	0.12 REF		
PKG TOLERANCE		aaa	0.0500		
MOLD FLATNESS		bbb	0.1000		
COPLANARITY		ccc	0.0800		

NOTES

1、Dimensioning and tolerance conform to ASME Y14.5-2009

2、All dimensions are in millimeters

TITLE 4L PQFN 3.2*2.5*0.75mm	DWG NO.	
	POD-PQFN-002-M3225-001	
	REV.	SHEET
DATE 24-OCT-2023	A02	1 OF 2

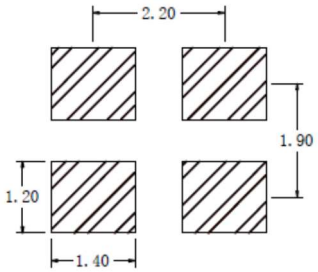

8 Top Marking

The figure below illustrates the mark specification for the SWPM102. The table below lists the line information.

[1] Taping specification

The carrier tape basic dimensions are based on EIA-481

(1) Tape dimensions

Material of the Carrier Tape: PS

Material of the Cover Tape (Top Tape): PET+PE

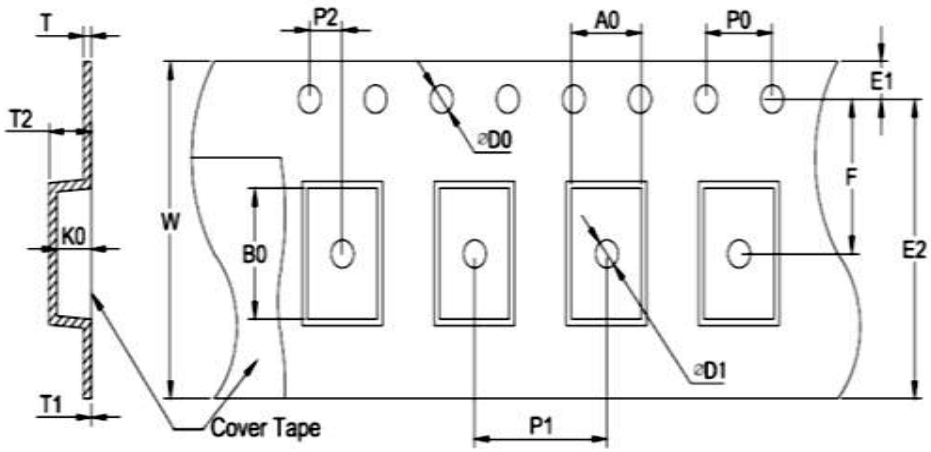

Table-1

Package	Tape size	D0	D1	E1	F	P0	P1	P2
PQFN-M3225	8	1.6±0.1	1.0±0.1	1.75±0.1	3.5±0.1	4.0±0.1	4.0±0.1	2.0±0.05
PQFN-M2520	8	1.5±0.1	1.0±0.1	1.75±0.1	3.5±0.1	4.0±0.1	4.0±0.1	2.0±0.05
PQFN-M2016	8	1.6±0.1	1.0±0.1	1.75±0.1	3.5±0.1	4.0±0.1	4.0±0.1	2.0±0.05

Package	Tape size	T	T1	W	A0	B0	K0	
PQFN-M3225	8	0.2±0.1	0.05±0.01	8±0.1	2.75±0.1	3.45±0.1	1.0±0.1	
PQFN-M2520	8	0.2±0.1	0.05±0.01	8±0.1	2.25±0.1	2.7±0.1	0.9±0.1	
PQFN-M2016	8	0.2±0.1	0.05±0.01	8±0.1	1.8±0.1	2.25±0.1	1.0±0.1	

Note: All dimensions are in mm

(2) Reel dimensions
Material of the Reel: PS

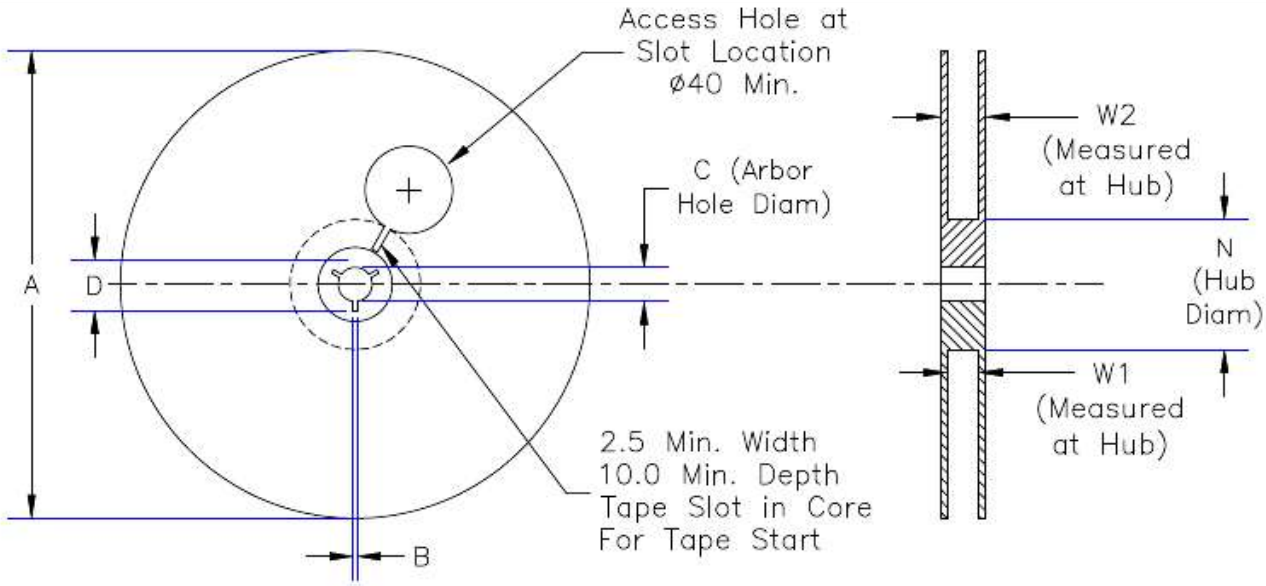

Table-2:

Reel type.	Tape Size	A	B Min.	C	N	W1	W2 Max.
7-inch reel	8	180±2	1.5	13.0±2	60±3	8.5±2	16
13-inch reel	8	330±2	1.5	13.0±2	100±0.5	8.5±2	16

Note: All dimensions are in mm

(3) Packing:

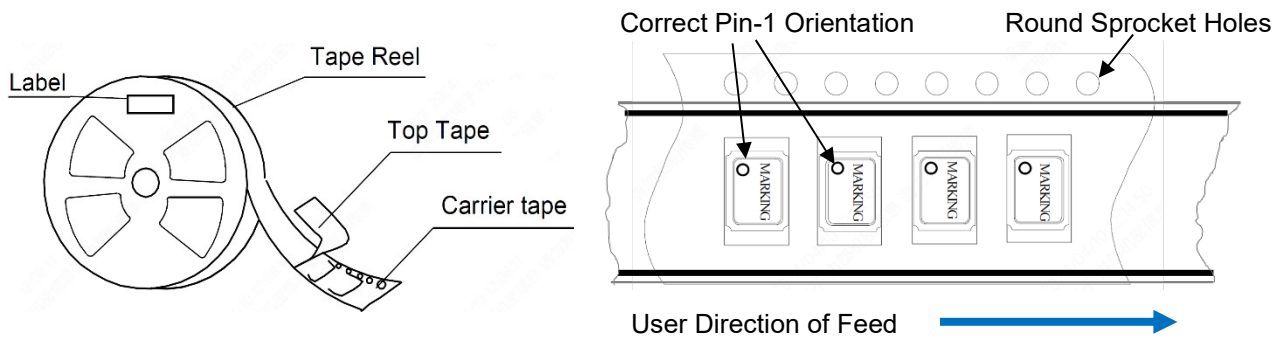

(4)Tape Start & End Point

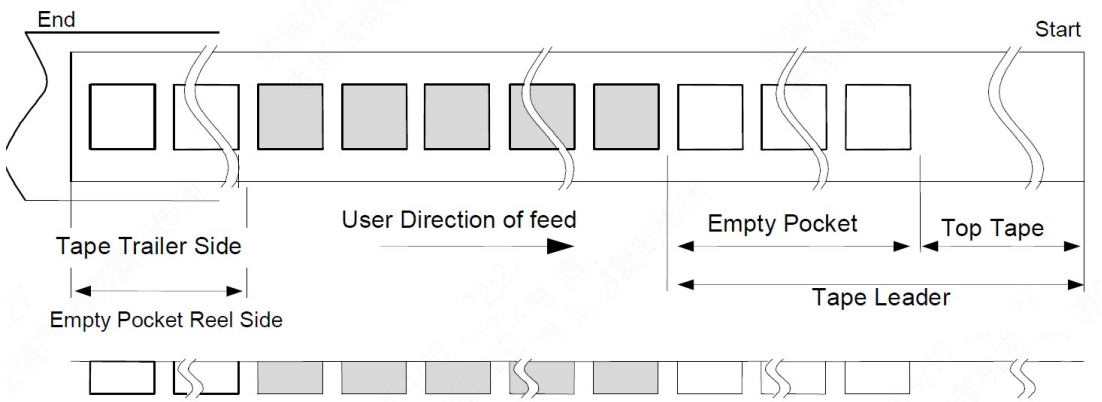

Table-3

Item		Empty Space	Note
Tape Leader	Top Tape	Min. 1 000 mm	Feeding in the Top tape, the tip is fixed with tape.
	Carrier Tape	Min. 160 mm	
Tape Trailer	Top Tape	Min. 0 mm	Tip is fixed to the reel.
	Carrier Tape	Min. 160 mm	

The next table provides the ordering details for tape and reel quantity, reel size. “Suffix” character is the last character in the part number string as shown in the example below.

SWPM102DAI33E1-25.000000D

Table-4: Tape & Reel Option Selections with Part Number Coding:

Suffix	Packaging Method	Package Size (mm)	Reel Size (inches)	Qty per Reel
D	8mm Tape & Reel	3.2 x 2.5	7	3000
	8mm Tape & Reel	2.5 x 2.0	7	3000
	8mm Tape & Reel	2.0 x 1.6	7	3000
	8mm Tape & Reel	2.0 x 1.2	7	3000
	8mm Tape & Reel	1.5 x 0.8	7	3000
E	8mm Tape & Reel	3.2 x 2.5	7	1000
	8mm Tape & Reel	2.5 x 2.0	7	1000
	8mm Tape & Reel	2.0 x 1.6	7	1000
	8mm Tape & Reel	2.0 x 1.2	7	1000
	8mm Tape & Reel	1.5 x 0.8	7	1000

[5] Storage environment

(1) Before open the packing, we recommend to keep less than +30 C and 85 %RH of Humidity, and to use it less than 6 months after delivery.
(2) We recommend to open Package in immediately before use. After open Package, We recommend to keeps less than 6 month. No need dry air before soldering work if it is less than temperature +30 C, 85 humidity %RH.
(3) Not to storage with some erosive chemicals.
(4) Nothing is allowed to put on the reel or carton to prevent mechanical damage.

9 IMPORTANT NOTICE AND DISCLAIMER

StarWave provides technical information such as datasheets, characterization reports, application notes, reference designs, and other resources “as is” and with all faults, and disclaims all warranties, express and implied, including without limitation any implied warranties of merchantability, fitness for a particular purpose or non-infringement of third-party intellectual property rights. These resources are subject to change without notice except when PCN is applicable. StarWave grants you permission to use these resources only for development of an application that uses the StarWave products described in the resource. Other reproduction and display of these resources are prohibited. No license is granted to any other StarWave intellectual property right or to any third-party intellectual property right. StarWave disclaims responsibility for, and you will fully indemnify StarWave and its representatives against, any claims, damages, costs, losses, and liabilities arising out of your use of these resources. StarWave’s products are provided subject to StarWave’s Terms of Sale or other applicable terms available either on starwavecorp.com or provided in conjunction with such StarWave products.

Contact: info@starwavecorp.com