THIS DRAWING IS UNPUBLISHED. RELEASED FOR PUBLICATION 20
© COPYRIGHT 20 BY - ALL RIGHTS RESERVED.

REVISIONS

P	LTR	DESCRIPTION	DATE	DWN	APVD
	A3	REVISED (ECR-21-125081)	23.DEC'21	JW	YJ

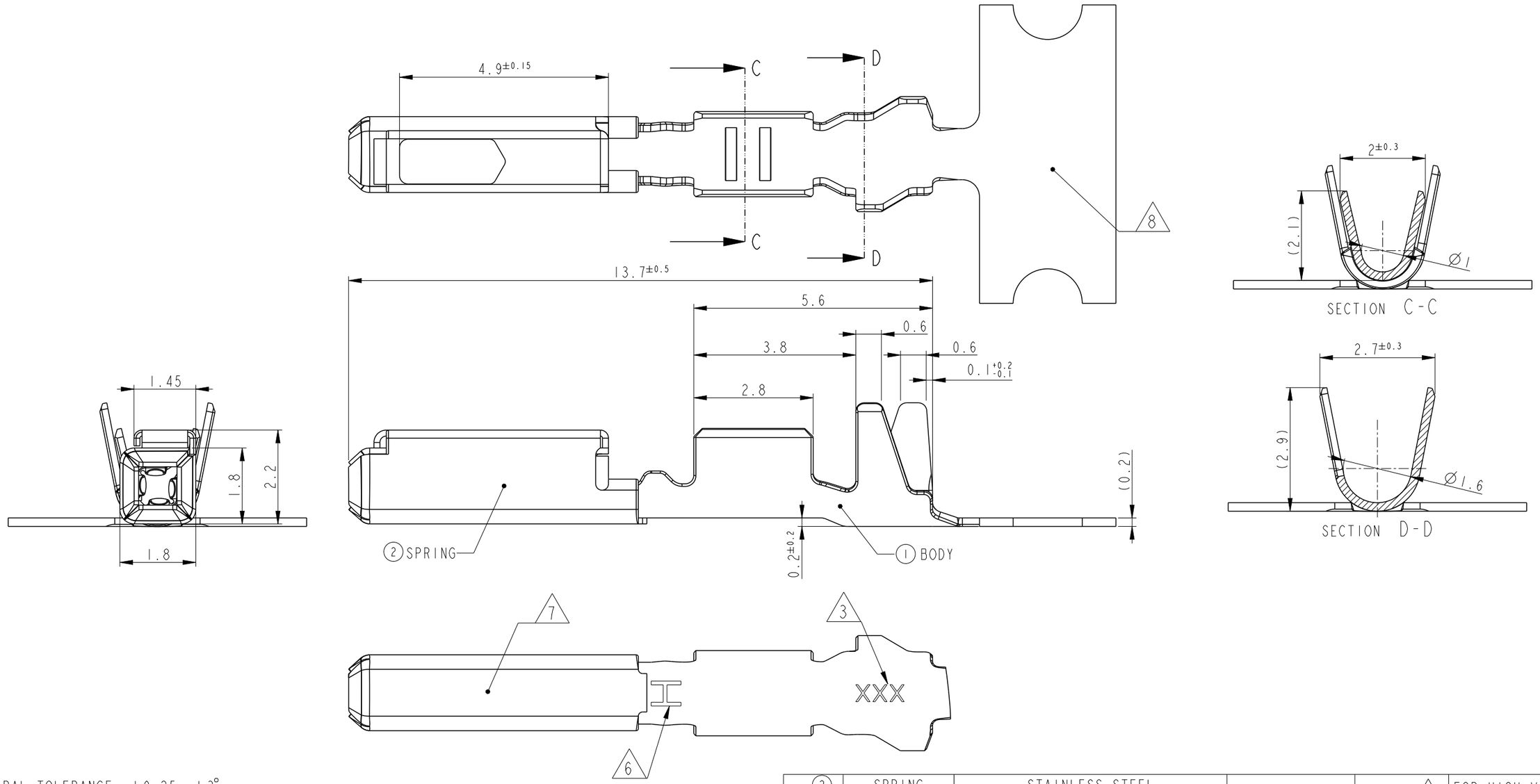

NOTE

1. GENERAL TOLERANCE: ±0.25, ±3°
2. APPLICABLE WIRE: AESSX(F) 0.5-0.75sqmm OR EQUIV.
3. TE LOGO AND DATE-CODE
4. APPLICATOR FEED: 7.0
5. MATING TAB THICKNESS: $0.63^{+0/-0.03}$
6. FOR HIGH VIBRATION APPLICATION
7. THE FIRST SPRING IS MARKED WITH AN INDICATION "_____" IN DOUBLE OUT DIES
8. THE NUMBER "1" or "2" IS MARKED IN DOUBLE OUT DIES

POS.	DESCRIPTION	FINISH	MATERIAL	PART NUMBER	MARKING	REMARKS
2	SPRING	STAINLESS STEEL		1-2005120-1	H 6	FOR HIGH VIBRATION APPLICATION
1	BODY	PRE-TINNED	COPPER ALLOY			
2	SPRING	STAINLESS STEEL		2005120-1	NONE	
1	BODY	PRE-TINNED	COPPER ALLOY			

THIS DRAWING IS A CONTROLLED DOCUMENT.

DIMENSIONS: mm

TOLERANCES UNLESS OTHERWISE SPECIFIED:
0 PLC ±
1 PLC ±
2 PLC ±
3 PLC ±
4 PLC ±
ANGLES ±

MATERIAL SEE TABLE
FINISH SEE TABLE

DWN SG OH 20-APR-2009
CHK YD LEE
APVD HG CHO
PRODUCT SPEC -
APPLICATION SPEC 114-61024
WEIGHT -

TE Connectivity

NAME MQS CLEAN BODY CONTACT

SIZE	CAGE CODE	DRAWING NO	RESTRICTED TO
A3	00779	C-2005120	-

CUSTOMER DRAWING | SCALE 10:1 | SHEET 1 OF 1 | REV A3