DWG. NO.	SYM.
SJ015093-E	1

SYM.	DCN NO.	DESCRIPTION	DATE	DRAWN	CHECKED	APP'D	APP'D

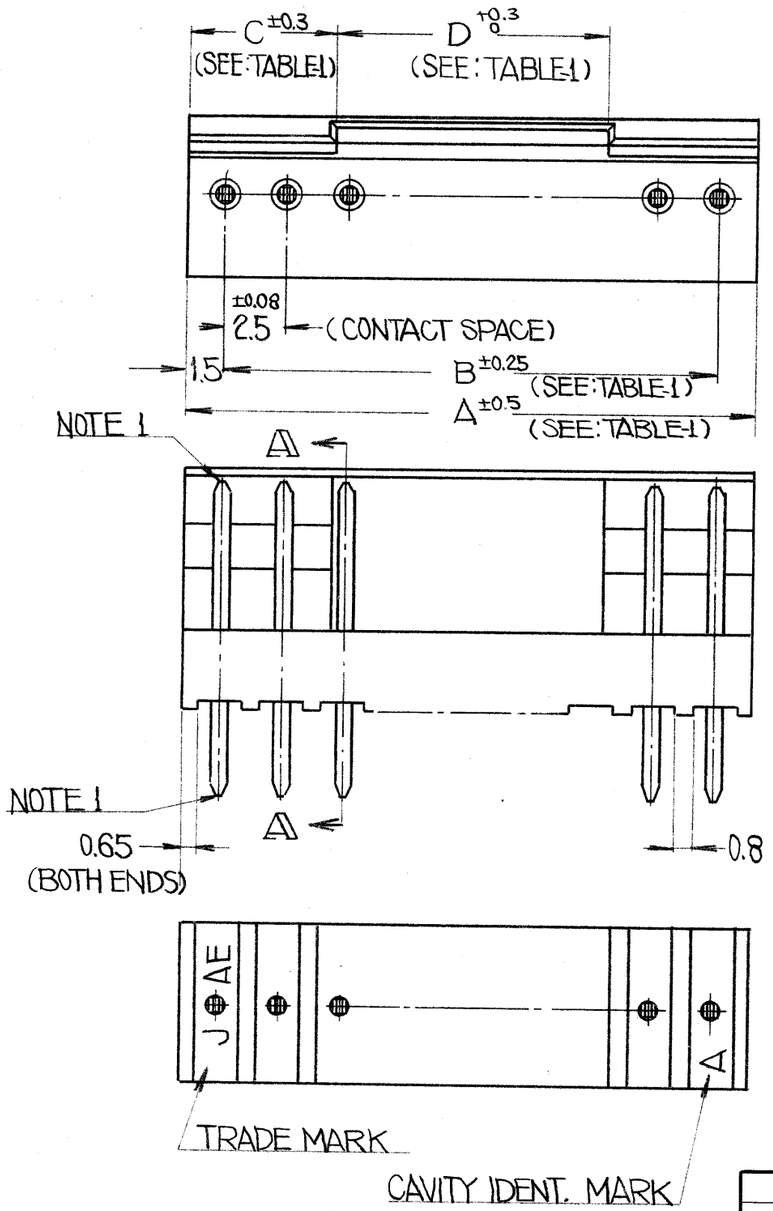

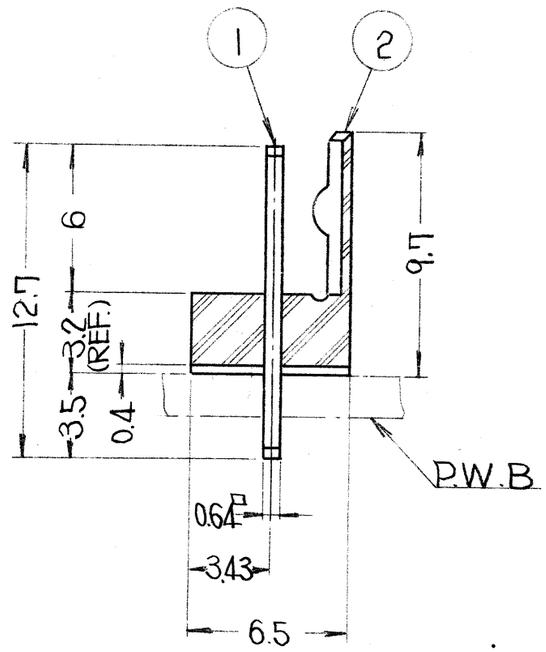

SECTION A-A

TABLE-1

NO. OF CONTACTS \ DIM.	A ±0.5	B ±0.25	C ±0.3	D +0.3 0
2	5.5	2.5	2	1.5
3	8	5	3	2
4	10.5	7.5	4	2.5
5	13	10	5	3
6	15.5	12.5	6	3.5
7	18	15	6	6
8	20.5	17.5	6	8.5
9	23	20	6	11
10	25.5	22.5	6	13.5

HOW TO ORDER

IL-※※P-S3EN2-※(N)

- (N): NEW TYPE (5-CONTACT ONLY)
- ※: INSULATOR COLOR (STANDARD COLOR; LIGHT BROWN ISN'T SHOWN)
- ※: THICKNESS OF APPLICABLE P.C BOARD (2; 1.6 ~2.4 THICK)
- N: INSULATOR TYPE
- E: CONTACT TYPE
- 3: CONTACT SPACING (2.5mm ONLY)
- S: CONTACT ROW (SINGLE ONLY)
- P: POST SIDE
- ※※: NO. OF CONTACTS (SEE TABLE 1)
- IL: SERIES PREFIX

ITEM	DESCRIPTION	Q'TY	MATERIAL	FINISH	PART NO.
2	INSULATOR	1	THERMOPLASTIC	——	
1	CONTACT	SEE: TABLE-1	COPPER ALLOY	TIN OVER NICKEL	

NOTE
1. NO PLATING ON THESE AREAS.

NEXT ASS'Y	USED ON	NEXT ASS,Y	FINAL ASS'Y
APPLICATION		QT'Y REQ'D	

UNLESS OTHERWISE SPECIFIED
DIMENSIONS ARE IN MILLIMETERS
TOLERANCES ON:
FRACTIONS | DECIMALS .X ±0.5 .XX ±0.2 | ANGLES
±0.8

TREATMENT OR FINISH

DATE DEC. 1977
DRAWN E. MURANO
CHECKED K. Takeda
APP'D T. SOMEI
APP'D Joe Sawato

3rd Angle Drawing

TITLE
STRIGHT PIN HEADER
IL-※※P-S3EN2-※

SCALE ×4 | DWG.SIZE B | WT.

JAE-CONNECTOR.COM
Reference Only

JAPAN AVIATION ELECTRONICS IND. CO., LTD.
FACTORY
NAKAGAMI-CHO, AKISHIMA -SHI
TOKYO. JAPAN

DWG. NO. SJ015093-E
SHEET 1 OF 1