THIS DRAWING IS UNPUBLISHED. RELEASED FOR PUBLICATION 2018
© COPYRIGHT 2001 BY TE CONNECTIVITY ALL RIGHTS RESERVED.

REVISIONS

P	LTR	DESCRIPTION	DATE	DWN	APVD
	D	REVISED PER E.O. P18990	29JUL2005	JA	RDR
	E	REVISED PER E.O. P19859	14MAY2008	KM	RDR
	F	REVISED PER PCN E-18-012207	31JUL2018	JA	DM
	G	REVISED PER PCN-22-151736	06SEP2022	CL	IG

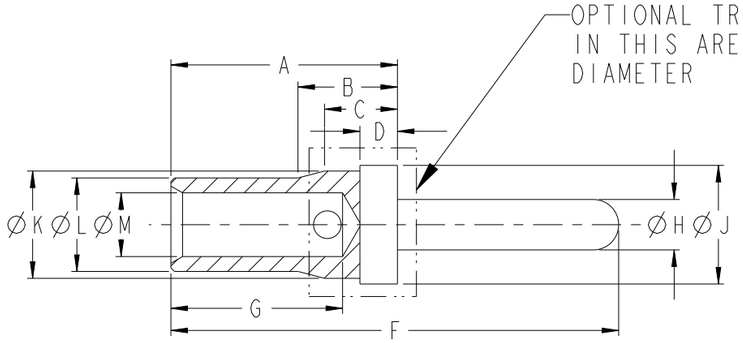

PIN CONTACT

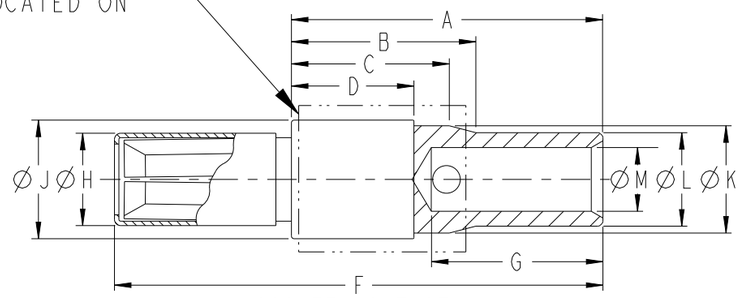

SOCKET CONTACT

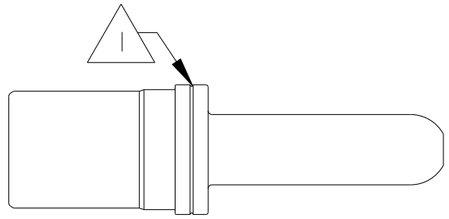

VIEW FOR 4060-009-04141

CONTACT PART NUMBER	SIZE TYPE	WIRE GAGE	A MAX	B MAX	C MAX	D MAX	F MAX	G MIN	H MAX	J MAX	K MAX	L MAX	M MIN	RECOMMENDED STRIP LENGTH
4060-001-16XX	16 PIN	16-18	.605 [15.37]	.286 [7.26]	.211 [5.36]	.108 [2.74]	1.108 [28.14]	.240 [6.10]	.063 [1.60]	.161 [4.09]	.134 [3.40]	.103 [2.62]	.067 [1.70]	.240-.302 [6.10-7.67]
4062-001-16XX	16 SOC	16-18	.890 [22.61]	.571 [14.50]	.496 [12.60]	.393 [9.98]	1.364 [34.65]	.240 [6.10]	.113 [2.87]	.161 [4.09]	.134 [3.040]	.103 [2.62]	.067 [1.70]	.240-.302 [6.10-7.67]
4060-002-12141	12 PIN	12-14	.620 [15.75]	.286 [7.26]	.211 [5.36]	.108 [2.74]	1.178 [29.92]	.250 [6.35]	.094 [2.39]	.209 [5.31]	.180 [4.57]	.152 [3.86]	.097 [2.46]	.250-.312 [6.35-7.92]
4062-002-12141	12 SOC	12-14	.905 [22.99]	.571 [14.50]	.496 [12.60]	.393 [9.98]	1.379 [35.03]	.250 [6.35]	.160 [4.06]	.209 [5.31]	.180 [4.57]	.152 [3.86]	.097 [2.46]	.250-.312 [6.35-7.92]
4060-004-08141	8 PIN	10	.675 [17.15]	.286 [7.26]	.211 [5.36]	.108 [2.74]	1.303 [33.10]	.475 [12.07]	.143 [3.63]	.337 [8.56]	.305 [7.75]	.266 [6.76]	.135 [3.43]	.475-.537 [12.07-13.64]
4062-003-08141	8 SOC	10	.915 [23.24]	.526 [13.36]	.451 [11.46]	.348 [8.84]	1.421 [36.09]	.475 [12.07]	.262 [6.65]	.337 [8.56]	.305 [7.75]	.266 [6.76]	.135 [3.43]	.475-.537 [12.07-13.64]
4060-003-08141	8 PIN	8	.645 [16.38]	.286 [7.26]	.211 [5.36]	.108 [2.74]	1.273 [32.33]	.475 [12.07]	.143 [3.63]	.337 [8.56]	.305 [7.75]	.266 [6.76]	.178 [4.52]	.475-.537 [12.07-13.64]
4062-004-08141	8 SOC	8	.885 [22.48]	.526 [13.36]	.451 [11.46]	.348 [8.84]	1.391 [35.33]	.475 [12.07]	.262 [6.65]	.337 [8.56]	.305 [7.75]	.266 [6.76]	.178 [4.52]	.475-.537 [12.07-13.64]
4060-006-04141	4 PIN	6	.665 [16.89]	.226 [5.74]	.211 [5.36]	.108 [2.74]	1.423 [36.14]	.475 [12.07]	.226 [5.74]	.418 [10.62]	.387 [9.83]	.377 [9.58]	.237 [6.02]	.480-.542 [12.19-13.77]
4062-005-04141	4 SOC	6	.905 [22.99]	.475 [12.07]	.451 [11.46]	.348 [8.84]	1.411 [35.84]	.480 [12.19]	.340 [8.64]	.418 [10.62]	.387 [9.83]	.377 [9.58]	.237 [6.02]	.480-.542 [12.19-13.77]
4060-005-04141	4 PIN	4	.645 [16.38]	.226 [5.74]	.211 [5.36]	.108 [2.74]	1.403 [35.64]	.480 [12.19]	.226 [5.74]	.418 [10.62]	.387 [9.83]	.377 [9.58]	.288 [7.32]	.480-.542 [12.19-13.77]
1 4060-009-04141	4 PIN	4	.645 [16.38]	.226 [5.74]	.211 [5.36]	.108 [2.74]	1.403 [35.64]	.480 [12.19]	.227 [5.77]	.418 [10.62]	.387 [9.83]	.377 [9.58]	.288 [7.32]	.480-.542 [12.19-13.77]
4062-006-04141	4 SOC	4	.885 [22.48]	.475 [12.07]	.451 [11.46]	.348 [8.84]	1.391 [35.33]	.480 [12.19]	.340 [8.64]	.418 [10.62]	.387 [9.83]	.377 [9.58]	.288 [7.32]	.480-.542 [12.19-13.77]

TE INTERNAL PN	DEUTSCH PN	PLATING
4060-001-16141	4060-001-16141	NICKEL
4060-001-1631	4060-001-1631	GOLD
4060-001-16321	4060-001-16321	GOLD
4062-001-16141	4062-001-16141	NICKEL
4062-001-1631	4062-001-1631	GOLD
4060-002-12141	4060-002-12141	NICKEL
4062-002-12141	4062-002-12141	NICKEL
4060-004-08141	4060-004-08141	NICKEL
4062-003-08141	4062-003-08141	NICKEL
4060-003-08141	4060-003-08141	NICKEL
4062-004-08141	4062-004-08141	NICKEL
4060-006-04141	4060-006-04141	NICKEL
4062-005-04141	4062-005-04141	NICKEL
4060-005-04141	4060-005-04141	NICKEL
4060-009-04141	4060-009-04141	NICKEL
4062-006-04141	4062-006-04141	NICKEL

3. ALL DIMENSIONS ARE BEFORE PLATING. +.002[0.05] TO ALL MAX. VALUES AND -.002[0.05] TO ALL MIN. VALUES.

2. THESE CONTACTS MAY BE CRIMPED WITH HDP-400 POWER CRIMP OR HDT-48-00 (SIZE 12 & 16) AND HDT-04-10 (SIZE 4 & 8) HAND TOOLS.

1 NOTED CONTACT IS IDENTIFIED WITH A SINGLE GROOVE ALL AROUND ON CONTACT SHOULDER.

NOTES: UNLESS OTHERWISE SPECIFIED

THIS DRAWING IS A CONTROLLED DOCUMENT.

DIMENSIONS: INCHES [mm]

TOLERANCES UNLESS OTHERWISE SPECIFIED:
0 PLC ±
1 PLC ±
2 PLC ±
3 PLC ±
4 PLC ±
ANGLES ±

MATERIAL

FINISH

DWN J.NORRIS 19DEC1993
CHK P.CARNAHAN 14MAY2008
APVD R.REED 14MAY2008
PRODUCT SPEC -
APPLICATION SPEC 4025-003-0000
WEIGHT

TE Connectivity

NAME CONTACT, INFORMATION DRAWING C.E. SERIES

SIZE	CAGE CODE	DRAWING NO	RESTRICTED TO
A3	4AFU8	C-4025-001-0000	

CUSTOMER DRAWING | SCALE NONE | SHEET 1 OF 1 | REV G

1470-19 (3/13)