THIS IS ISSUED IN STRICT CONFIDENCE ON CONDITION THAT IT IS NOT USED AS A BASIS FOR MANUFACTURE OR SALE, AND THAT IT IS NOT COPIED, REPRINTED OR DISCLOSED TO A THIRD PARTY EITHER WHOLLY OR IN PART WITHOUT THE PRIOR WRITTEN CONSENT OF ITT CANNON.

DWG NO.	SH	REV
027391Y0001	1	-

REV	DCR	DESCRIPTION	DATE	APPROVAL

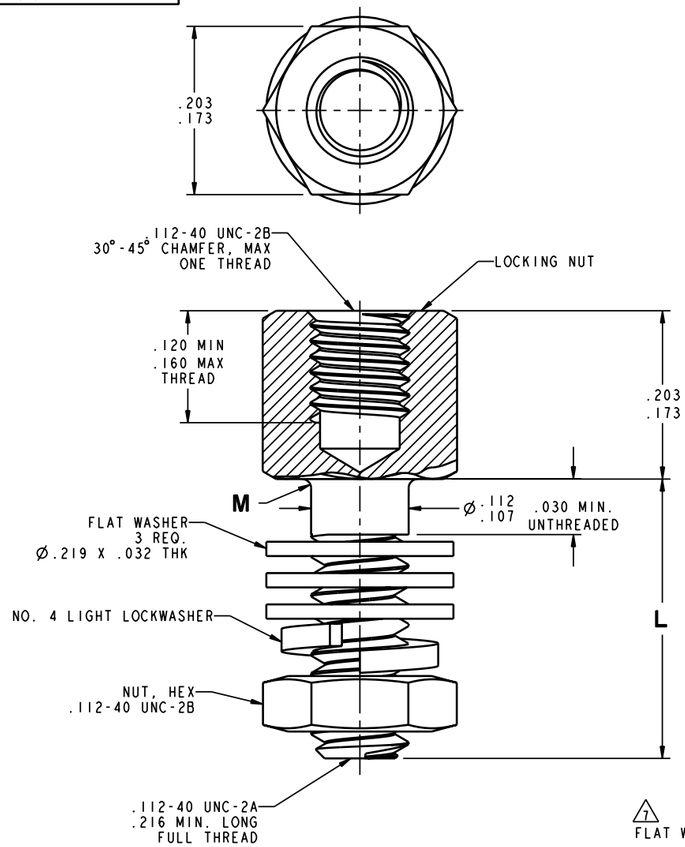

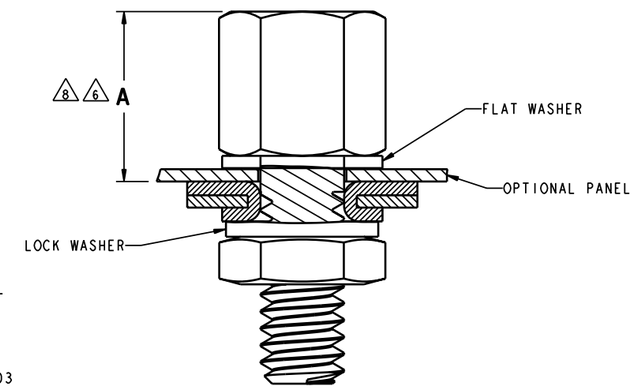

RIVET SHELL STYLE 8

(REAR PANEL MOUNTING SHOWN)

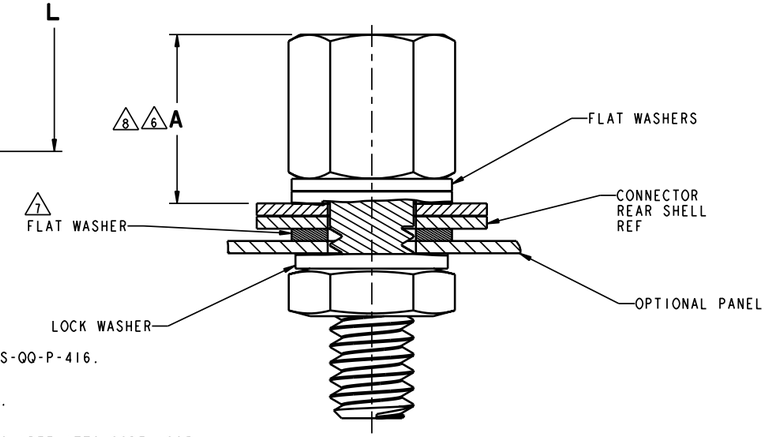

TAB SHELL STYLE 8

(FRONT PANEL MOUNTING SHOWN)

TABLE 1					
PART NUMBER (QTY 1 SET)	PART NUMBER (QTY 2 SET)	FINISH	ROHs CODE	L ±.015	M MAX
D20418-145	D20418-82	2	NTC	.312	.005
D20418-146		3	NTC	.312	.005
D20418-147	D20418-83	2	NTC	.625	.005
D20418-148		3	NTC	.625	.005
D20418-50	D20418-131	2	NTC	.500	.010
D20418-74	D20418-132	2	NTC	.750	.010
D20418-134		4	ROH	.312	.010
D20418-135		4	ROH	.500	.010
D20418-136		4	ROH	.625	.010
D20418-137		4	ROH	.750	.010

TABLE 2	
SHELL SIZE	A±.030
1 & 2 (E & A)	.250
3, 4, 5 (B, C, D)	.238

NOTES: UNLESS OTHERWISE SPECIFIED

1. MATERIAL: COLD ROLLED STEEL.

2 FINISH: YELLOW CHROMATE OVER CADMIUM IN ACCORDANCE WITH SAE AMS-QQ-P-416.

3 FINISH: YELLOW CHROMATE OVER ZINC IN ACCORDANCE WITH ASTM B633.

4 FINISH: CLEAR TRIVALENT CHROMATE (CR+3) OVER ZINC PER ASTM B633 (REF ITTC CODE A235).

5. INSPECTION PER MIL-DTL-24308, GROUP A REQUIRED

6 REMOVE ONE FLAT WASHER FOR EACH .030 THICKNESS OF PANEL WHEN REAR MOUNTING SO THAT "A" DIMENSION IS MAINTAINED.

7 FOR FRONT PANEL MOUNTING OF TAB TYPE SHELL ONE WASHER IS REQUIRED BETWEEN REAR SHELL AND PANEL.

8 RECOMMENDED INSTALLATION CONFIGURATIONS. OTHER CONFIGURATION COMBINATIONS POSSIBLE DEPENDING ON FRONT OR REAR PANEL MOUNTING AND SHELL STYLE; HOWEVER DIMENSION "A" SHOULD ALWAYS BE MAINTAINED.

9. A 5 INCH-POUND MAXIMUM TORQUE DURING ASSEMBLY IS RECOMMENDED.

RoHS COMPLIANCE CODE

NTC - not RoHS compliant
ROC - RoHS not hi-temp
ROH - RoHS & hi-temp (260°C)
NOTE - REFER TO TABLE/NOTES

NOTE

ITT Cannon LLC
56 Technology Drive, IRVINE, CA 92618

UNLESS OTHERWISE SPECIFIED:
-DIMENSIONS AND TOLERANCES AS PER ASME Y14.5M-1994
-DIMENSIONS ARE IN INCHES AND [MM].
-REMOVE ALL BURRS AND SHARP EDGES .005 [0.13] MAX.
-DO NOT SCALE DRAWING.

DRAWN	Ha Le	DATE	9/21/17
CHECKED	Larry Ensign	DATE	9/22/17
APPROVED	Larry Ensign	DATE	9/22/17

TOL DECIMALS: .X ± .02 [0.51]; .XX ± .01 [0.25]; .XXX ± .005 [0.127]; .XXXX ± .0005 [0.0127]
TOL ANGLES: 1° ± 1°
SURFACE ROUGHNESS: 63 [1.6]

3RD ANGLE PROJECTION

SCALE: 12.000
CAGE CODE: 71468
SIZE: D USE: P/C

WEIGHT
DENSITY
VOLUME
SURFACE AREA
REF
PART NO
CRITICAL DIM 0
SPC DIM 0
REF DIMENSION KEY 0

DESCRIPTION: CLAMP, ELECTRICAL, CONNECTOR FEMALE SCREWLOCK ASSEMBLY MASTER

SHEET 1 / 1 | 027391Y0001 | REV -

DWG FILE NAME: 027391Y0001

EXPORT CODE C

This document contains technical data that is subject to export controls under the Export Administration Act and Export Administration Regulations (15 CFR 730, et seq.). Any transfer of this data to non-US persons or to any location outside the United States must be in compliance with the Export Administration Regulations.

PRINTED COPIES ARE NOT MAINTAINED TO LATEST REVISION.