THIS DRAWING IS UNPUBLISHED. RELEASED FOR PUBLICATION -,- .
© COPYRIGHT - BY TYCO ELECTRONICS CORPORATION. ALL INTERNATIONAL RIGHTS RESERVED.

LOC	DIST
—	—

REVISIONS

P	LTR	DESCRIPTION	DATE	DWN	APVD
	A1	REVISED PER ECO-10-014168	02AUG10	HMR	MW

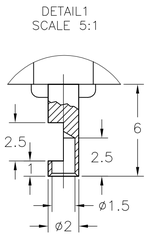

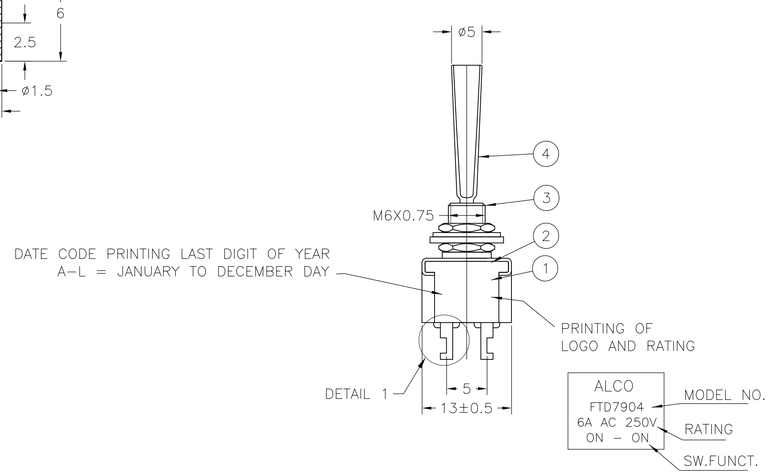

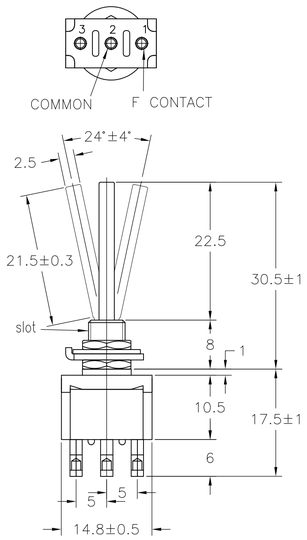

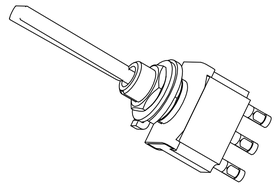

FUNCTION CHART

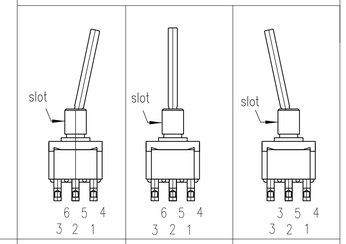

TE PN	PART	TERMINALS 2 AND 3 5 AND 6		TERMINALS 1 AND 2 4 AND 5
5-6437630-2	FTN7904	ON	NONE	ON
5-6437630-9	FTN79G04	ON	NONE	ON
7-6437592-5	FTP7904	ON	OFF	ON

(ON): MOMENTARY ACTION
OFF: MECHANICAL POSITION WITHOUT ELECTRICAL CONNECTION
NONE :NO MECHANICAL POSITION

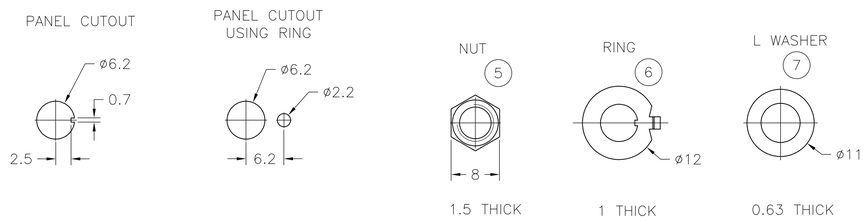

1. 0.5VA NO SWITCH FUNCTION WILL BE MARKED BUT WILL BE MARKED GOLD CON.
2. OPERATING TEMPERATURE -20°C TO +70°C
3. ALL MATERIALS AND FINISHES COMPLY WITH RoHS DIRECTIVE

TE PN	PART	F CONTACT	COMMON	RATING	INITIAL CONTACT RESISTANCE	INSULATION RESISTANCE	DIELECTRIC STRENGTH	ENDURANCE
5-6437630-9	FTN79G04	C3602BD Ep-Cu/Ni3,Au1b	C3602BD Ep-Cu/Ni3,Au1b	20V AC/DC 0.4VA	MAX 10 MILLIOHMS AT DC 2 ~ 4V 0.1A	MIN 1000 M Ohms AT DC 500V	AC 1KV/1min (AC 1.2KV/1sec)	ELECTRICALLY 50,000 CYCLES AT 20 CYCLES/MIN (RATED LOAD RESISTIVE) MECHANICALLY 100,000 CYCLES AT 20 CYCLES/MIN
5-6437630-2	FTN7904	99.8% Silver + C3602BD Ep-Cu/Ni3,AuFb	C3602BD Ep-Cu/Ni3,AuFb	AC 125V 6A AC 250V 6A	MAX 10 MILLIOHMS AT DC 2 ~ 4V 1A			
7-6437592-5	FTP7904							ELECTRICALLY 25,000 CYCLES AT 20 CYCLES/MIN (RATED LOAD RESISTIVE) MECHANICALLY 50,000 CYCLES AT 20 CYCLES/MIN
		CONTACT MATERIAL		SPECIFICATIONS				

MATERIALS CHART

Ep-Fe/Cu2,Ni4b	SK-5	L WASHER	7
Ep-Fe/Cu2,Ni3b	SPCC	RING	6
Ep-Cu/Ni3b	C3602BD	NUT	5
Ep-Cu/Ni3,Cr1b	C3602BD	ACTUATOR	4
Ep-Cu/Ni3b	C3602BD	BUSHING	3
	SUS	FRAME	2
	POLYESTER RESIN	CASE	1
OPTIONAL DESCRIPTION	MATERIAL/SURFACE	PART NAME	PART NO

PART LIST

THIS DRAWING IS A CONTROLLED DOCUMENT.

DIMENSIONS: mm

TOLERANCES UNLESS OTHERWISE SPECIFIED:
0 PLC ± -
1 PLC ± -
2 PLC ± -
3 PLC ± -
4 PLC ± -
ANGLES ± -

MATERIAL -
FINISH -

DWN RAGHAVENDRA 02AUG10
CHK MICHAEL WILBOURN 02AUG10
APVD MICHAEL WILBOURN 02AUG10
PRODUCT SPEC —
APPLICATION SPEC —
WEIGHT —

Tyco Electronics
Tyco Electronics Corporation
Harrisburg, PA 17105-3608

NAME TOGGLE SWITCH F-SERIES DP LONG LEVER

SIZE	CAGE CODE	DRAWING NO	RESTRICTED TO
A1	00779	C-1968515	—

CUSTOMER DRAWING | SCALE 1:1 | SHEET 1 OF 1 | REV A1

4805 (1/08)