No. of pos.	A $_{-0,76}$	B $_{+0,25}$	C	Part-No. Bulk package	Part-No. Single package
9	31,19	16,46	25,00 $^{+0,12}_{-0,13}$	165X17259X	165X17259XE
15	39,52	24,79	33,30 $^{+0,15}_{-0,1}$	165X17269X	165X17269XE
25	53,42	38,50	47,04 $\pm 0,13$	165X17279X	165X17279XE
37	69,70	54,96	63,50 $\pm 0,13$	165X17289X	165X17289XE
50	67,31	52,55	61,10 $^{+0,14}_{-0,11}$	165X17299X	165X17299XE

(5 : 1)

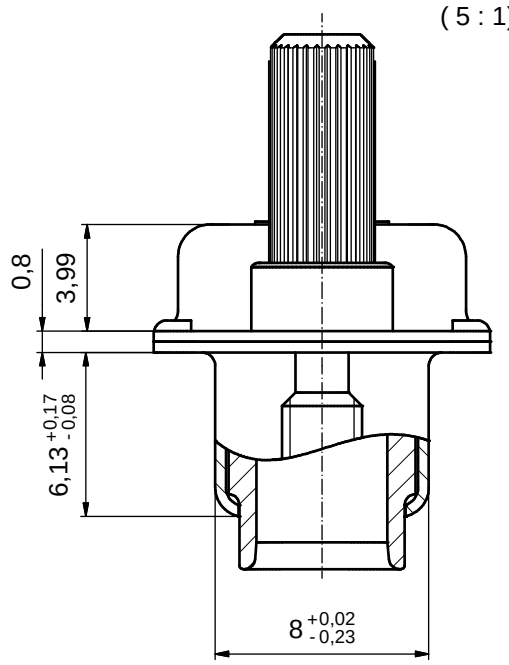

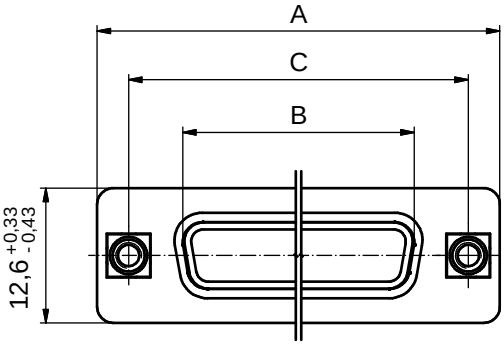

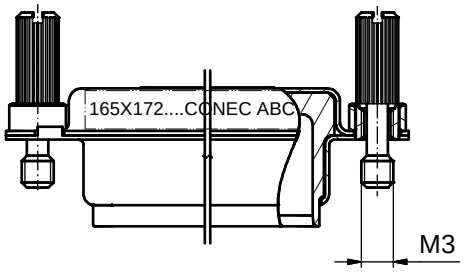

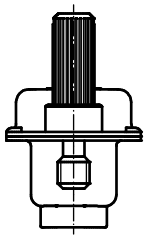

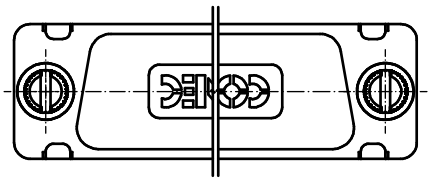

NOTES:

1. METALSHELLS: COPPER ALLOY; min. 315µin TIN over 40-80µin NICKEL
2. INSULATOR: TPE
3. THREADED INSERTS: BRASS
4. SCREWS: STEEL; NICKEL PLATED
5. CONNECTOR IS PART MARKED: PART NO. CONEC ABC

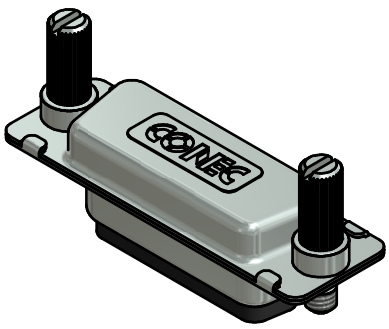

Directive 2002/95/EC RoHS compliant

THIS DRAWING MAY NOT BE COPIED OR REPRODUCED IN ANY WAY, AND MAY NOT BE PASSED ON TO A THIRD PARTY WITHOUT WRITTEN PERMISSION. OWNERSHIP AND COPYRIGHT OF CONEC GmbH

DO NOT ALTER CAD DRAWING BY HAND

rev.	description	date	name
a	Original		

tolerance

dim. in mm

	date	name
drawn	29.06.11	Henneboel
appd.	29.06.11	Fischer
norm	DIN 41652	
d-old		

CONEC®

scale: 2:1 (5:1)

material: SEE NOTES

title: HOOD 9-50pos.

WATER RESISTANT AND SHIELDED; FOR EMI/RFI for plug connector, with jack screws

dwg no: 16K1A2841

DIN-A3

sh: 1

part no: SEE TABLE