THIS DRAWING IS UNPUBLISHED. RELEASED FOR PUBLICATION – , – .
© COPYRIGHT – By – ALL RIGHTS RESERVED.

REVISIONS

P	LTR	DESCRIPTION	DATE	DWN	APVD
	P1	CUTTING BURR DETAILS ADDED	15NOV2018	RK	PS

1. MATERIAL:
   HOUSING: POLYAMIDE 6 UL94V–2.
   COLOR: NATURAL(OFF WHITE).
   TUBULAR CONTACT: BRASS TIN PLATED.
   SCREW: STEEL, M3.5, ZINC PLATED W/ NON–HEXAVALENT CHROMATE (CHROME III).

2. CURRENT RATING: 50A.
   OPERATING VOLTATE: 250V.
   WIRE RANGE: 8–22 AWG.

3. CONTINUOUS WORKING TEMPATURE 100°C MAX.

4. CUTTING PROJECTION CAN BE ON BOTH SIDES DEPENDING ON CUTTING LOCATION

5. CUTTING BURR MAX. 1mm ALLOWED.

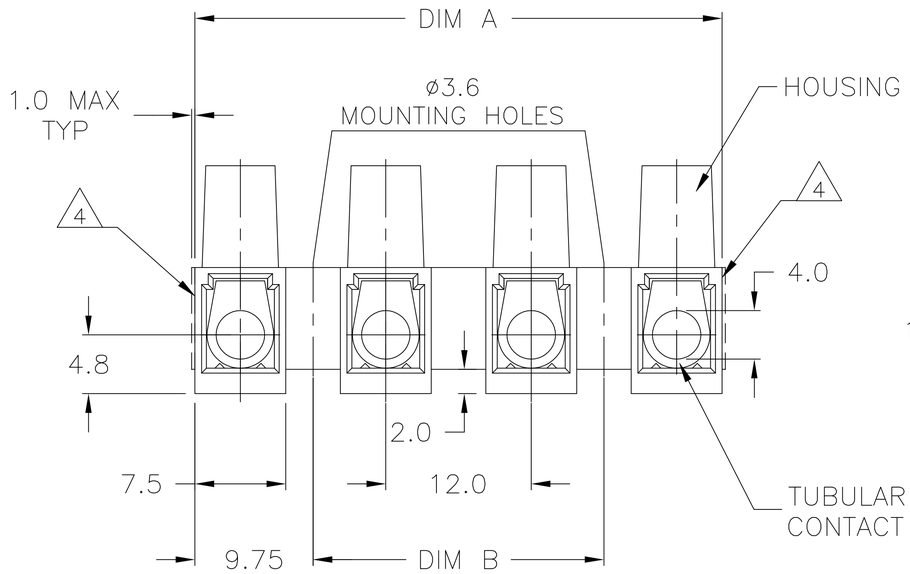

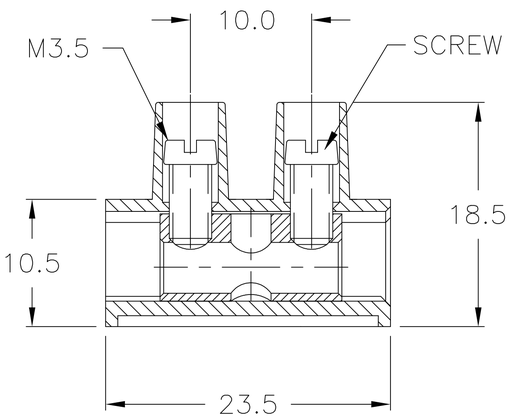

1776303–4 AS SHOWN

DIM B	DIM A	NO. OF POSN	T & B PART NUMBER	TE PART NUMBER
120.0	139.5	12	TSB100012	1–1776303–2
108.0	127.5	11	TSB100011	1–1776303–1
96.0	115.5	10	TSB100010	1–1776303–0
84.0	103.5	9	TSB100009	1776303–9
72.0	91.5	8	TSB100008	1776303–8
60.0	79.5	7	TSB100007	1776303–7
48.0	67.5	6	TSB100006	1776303–6
36.0	55.5	5	TSB100005	1776303–5
24.0	43.5	4	TSB100004	1776303–4
12.0	31.5	3	TSB100003	1776303–3
–	19.5	2	TSB100002	1776303–2
–	7.5	1	TSB100001	1776303–1

THIS DRAWING IS A CONTROLLED DOCUMENT.

DIMENSIONS: mm

TOLERANCES UNLESS OTHERWISE SPECIFIED:
0 PLC ± –
1 PLC ± 0.3
2 PLC ± 0.25
3 PLC ± –
4 PLC ± –
ANGLES ± 2°

MATERIAL: SEE NOTES
FINISH: SEE NOTES

DWN S SCHLEGEL 3/21/05
CHK C RICHARD 3/21/05
APVD C RICHARD 3/21/05
PRODUCT SPEC —
APPLICATION SPEC —
WEIGHT —

TE Connectivity Ltd.

NAME: EUROPA TSB1000 TUNNEL CONNECTION
—
—

SIZE A3 | CAGE CODE 00779 | DRAWING NO C–1776303 | RESTRICTED TO —

CUSTOMER DRAWING | SCALE NTS | SHEET 1 OF 1 | REV P1

1470–19 (1/15)