THIS DRAWING IS UNPUBLISHED. RELEASED FOR PUBLICATION – ,– .
© COPYRIGHT – By – ALL RIGHTS RESERVED.

LOC	DIST
ES	00

REVISIONS

P	LTR	DESCRIPTION	DATE	DWN	APVD
	A	INITIAL RELEASE	31MAR11	RC	CW

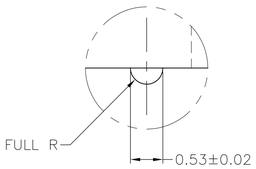

DETAIL Z
SCALE 20:1

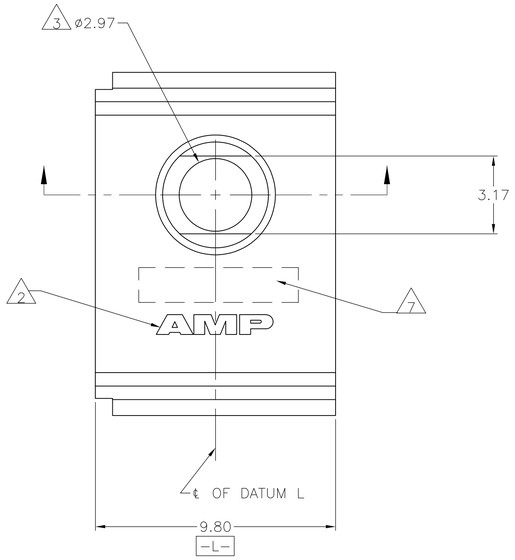

1. MATERIAL: GLASS FILLED POLYESTER, GRAY.
2. AMP TRADEMARK RECESSED.
3. THIS PART HAS A THRU HOLE TO ACCEPT A POWER/GUIDE PIN, AMP BASE PART NO 532828.
4. LOCATING HOLES NEED NOT BE PLATED THRU HOLES. BUT LOCATING NIPPLE IS DESIGNED TO FIT MIN PLATED THRU HOLE ø0.55mm FINISHED.
5. PLATED THRU HOLE FOR POWER APPLICATION ONLY.
6. SAME AS –1. SPECIAL PART FOR NORTEL AND THEIR CONTRACT MANUFACTURERS.
7. CONNECTOR PRINTED WITH PART NUMBER AND DATE CODE, LOCATED APPROXIMATELY AS SHOWN.

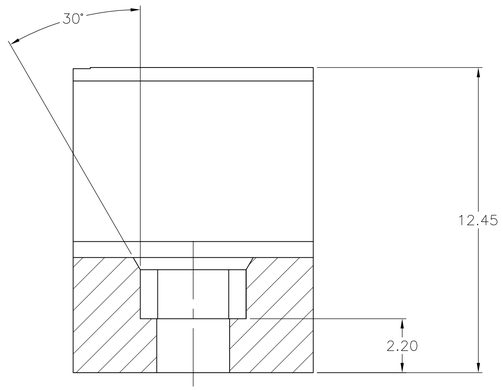

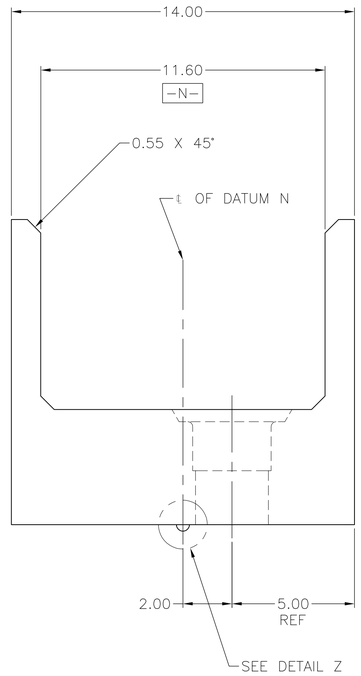

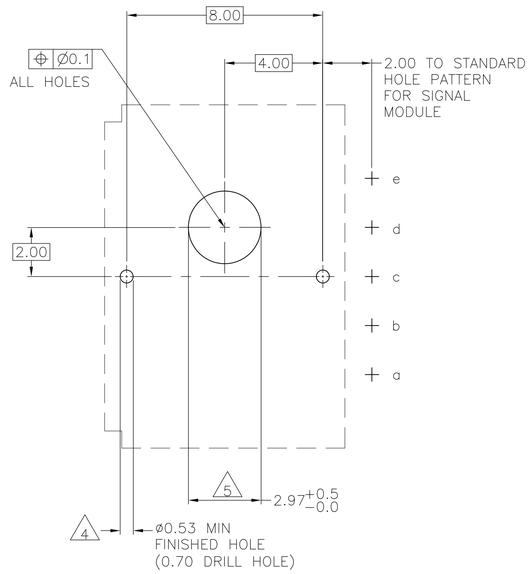

RECOMMENDED PCB–HOLE LAYOUT
COMPONENT SIDE

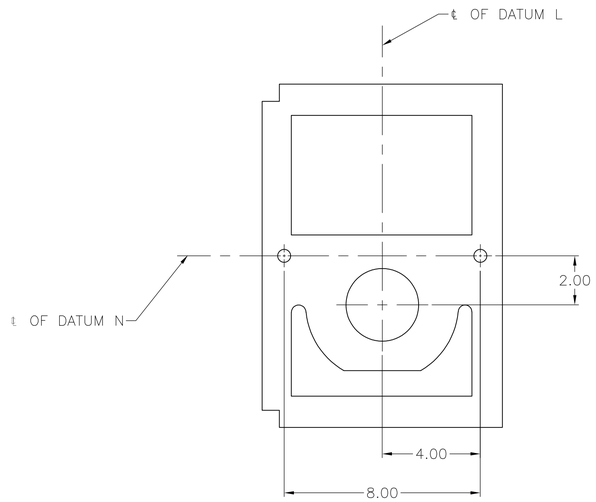

1645567–1
PART NUMBER

THIS DRAWING IS A CONTROLLED DOCUMENT.

DIMENSIONS: mm

TOLERANCES UNLESS OTHERWISE SPECIFIED:
0 PLC ±
1 PLC ±
2 PLC ± 0.1 ±0.2
3 PLC ±
4 PLC ±
ANGLES ±

MATERIAL 1

FINISH –

DWN RAYMOND CAO 31MAR11
CHK SANDERS YAN 31MAR11
APVD MANOJAN WANG 31MAR11

PRODUCT SPEC –
APPLICATION SPEC –
WEIGHT –

CUSTOMER DRAWING

TE Connectivity

NAME POWER/GUIDE PIN HOUSING MOLDED, 2mm HM

SIZE	CAGE CODE	DRAWING NO	RESTRICTED TO
A1	00779	C–1645567	–

SCALE 8:1 SHEET 1 OF 1 REV A

4805 (3/11)