THIS DRAWING AND DESIGN HEREON CONSTITUTES A PROPRIETARY DESIGN OF PACKARD ELECTRIC DIVISION AND IS NOT TO BE DUPLICATED OR REPRODUCED WITHOUT AUTHORITY OF PACKARD ELECTRIC DIVISION.

DO NOT SCALE

DATE	SYM	REVISION RECORD	AUTHORITY	DR	CK
09NO90	D2	REDRAWN WITH NO PHYSICAL CHANGE -			
		REMOVED 'PATENT PENDING', ADDED			
		INDEX CODE AND NOTE 6 AND REVISED			
		NOTES 1 & 2 AND PART NAME	137285	BKD	BKD
11JL91	D3	REMOVED 39.10 REF; ADDED 39.9 REF,			
		20.4 REF & PULL RIB NOTE; REVISED			
		NOTE •2 & 45.9 REF WAS 45.5 REF	143251	JK	
07OC02	05	ADDED DELPHI LOGO & NOTES			
		(2 PLCS) AND REVISED MAT'L			
		SPEC	231590	AA	AA

PART NO. 1202 0830

PACKARD ELECTRIC DIVISION
GENERAL MOTORS CORPORATION
WARREN, OHIO

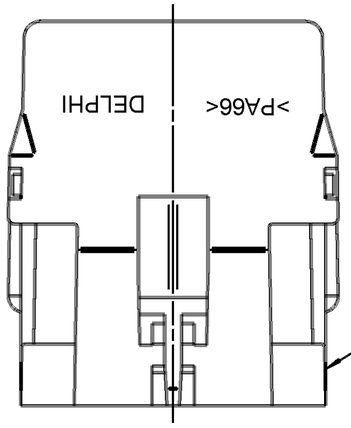

PULL OUT RIBS PERMITTED ALONG THIS AND OPPOSITE SURFACE

FLEX AREA MAY EXHIBIT MATERIAL SEPARATION AFTER FINAL ASSEMBLY

TERMINAL LOCK TO BE FOLDED DOWN AS SHOWN AFTER TERMINALS HAVE BEEN INSERTED

INDEX CODE
- 4001 -
(ALSO SEE HANDBOOK

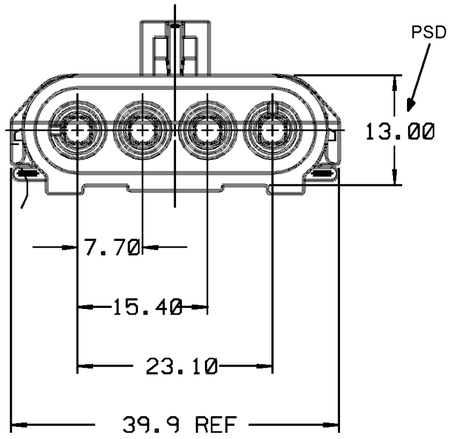

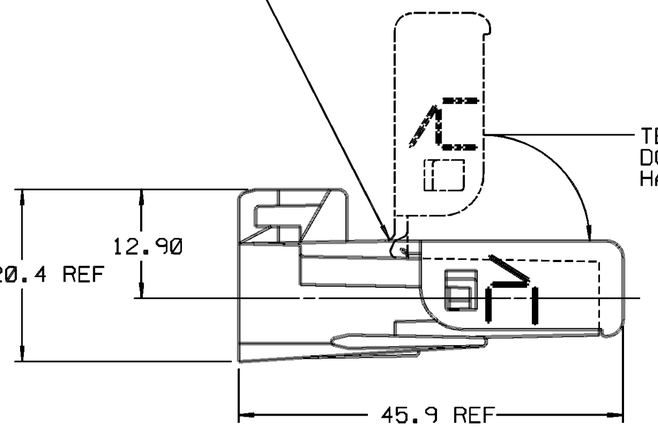

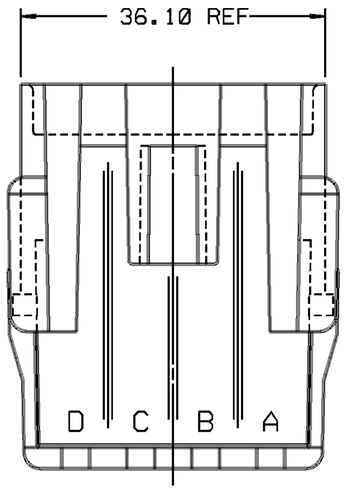

NOTES -
1. USE MALE TERMINAL 12089040 OR EQUIVALENT FOR 'PANEL MOUNT' APPLICATIONS.
2. MATING CONNECTOR IS 12020831/12010832 OR EQUIVALENT.
3. USE 12020833 LOCK OR EQUIVALENT.
4. SEALING CODE 3.
5. USE 12015323 CABLE SEAL OR EQUIVALENT.
6. **CAUTION:** DO NOT ATTEMPT TO COPY THIS DRAWING WHEN DESIGNING A MATING PART TO A WEATHER PACK CONNECTOR. PLEASE REQUEST THE LATEST COPY OF DRAWING NUMBER 12020084 FROM THE PACKARD ELECTRIC DIVISION.

O 7. MATERIAL RECYCLING CODE >PA66< PER SAE J1344. (2.3) X (0.1) RAISED CHARACTERS AS SHOWN TO BE LOCATED ON ANY EXTERIOR SURFACE. OPTIONAL CONSTRUCTION TO BE NO MATERIAL RECYCLING CODE.

O 8. (2.3) X (0.1) RAISED DELPHI CORPORATE BRAND TO BE LOCATED ON ANY EXTERIOR SURFACE, PREFERABLY VISIBLE AT FINAL ASSEMBLY. OPTIONAL CONSTRUCTION TO BE "PED" OR NO LOGO.

-0-
304
197A

PED / INTERGRAPH MICROSTATION

FILE SPEC: $$$$USER$$$$ DGN$SPECIFICATION$$$$$$$$$$$$ $$$$$SYTIME$$$$$$

THIRD ANGLE PROJECTION

METRIC
DIMENSIONS ARE IN MILLIMETERS UNLESS OTHERWISE SPECIFIED.

CODE NO. 6900

TOLERANCE UNLESS OTHERWISE SPECIFIED
DECIMAL: ANGULAR ± 2
ONE PLACE ± 0.3
TWO PLACE ± 0.15

Q.C.

DWG. DATE 03SE81 | SCALE NONE

DR. J. THIESS 07DE81

EST. NO.

CK. D. THIRY DATE 12JA82

REFERENCE NO. 12020830 'E' SIZE

APPR. A. SPISAK DATE 16NO81

APPR. J. YURTIN DATE 23NO81

MATERIAL SPEC. M3592001 PA66 HS IM BLK

NAME CONN 4M W/P SHD SLD

PART NO. 1202 0830 OUTLINE DRAWING

SIZE C