REV.	ECN NO.	DATE	SIGN	DESCRIPTION
F	C210309	2021/03/12	Ruru	F X2
G	C221973	2022/12/26	Ruru	G X1
H	C231034	2023/08/10	Ruru	H X1

B

D

MSDS-XXPMMP-SF8001

XX: No. Of Pin

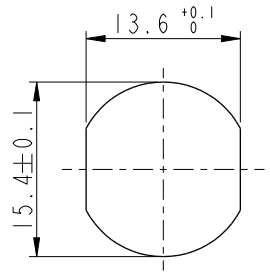

Recommended Panel Cut-Out

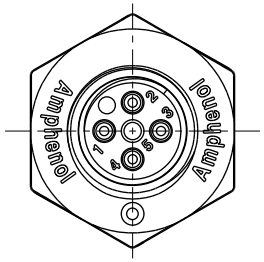

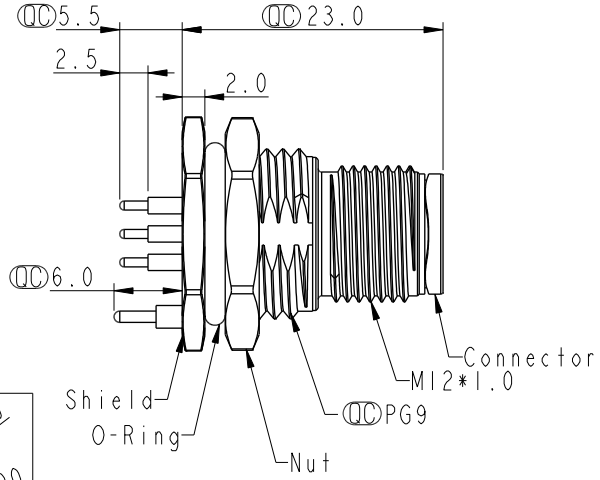

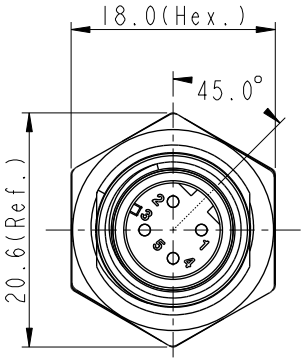

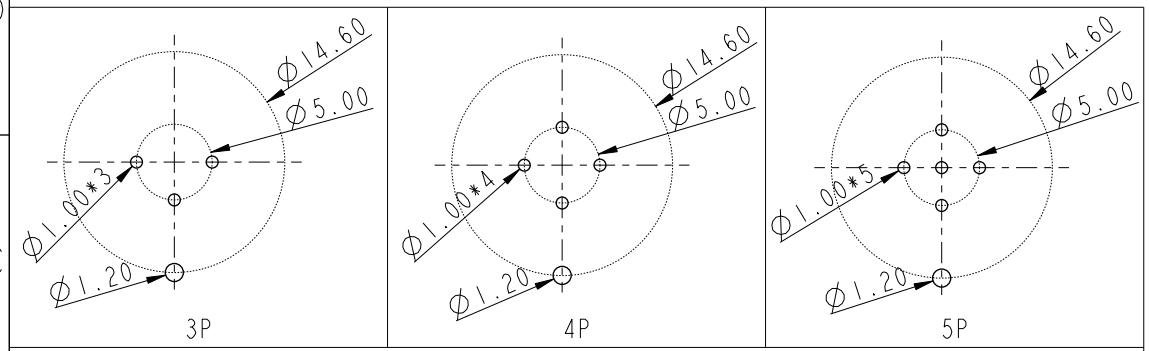

PCB Layout

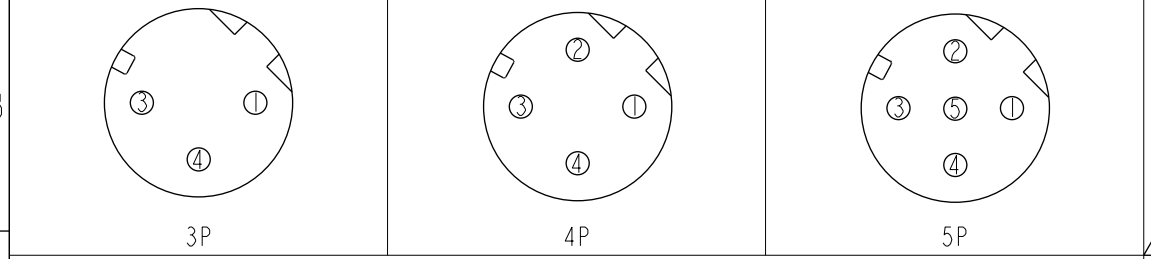

Pin Assignment Front View

C

D F Note:
- * RoHS Compliant
- * QC Important dimension
- G C * Waterproof rate: IP68, unmated 1m/24h
  - H IP69K, mated
- * Connector
  - Housing: Thermoplastic, Black
  - Pin: Copper alloy, Gold plated
- E * Shield: Metal
- E * Nut: Metal
- * O-Ring: Rubber, Black
- * For panel thickness max: 4.5mm
- * Nut is packed separately in pe bag

UNIT: mm

TOLERANCE

.X	±0.25
.XX	±0.1
.XXX	±0.05
ANGLES	±1°

TITLE	N SEN, M12 D -SHLD, SCREW RECEPTACLE, M, M, PCB S F		
SCALE 3:2	SIZE A4	SHEET 1 OF 1	
REV. H	WC-REV. A.5	QC: Inspection item	

Amphenol LTW

安費諾亮泰企業股份有限公司

ITEM NO		DRAWN BY Yulong_wang	DATE 2016-08-24
DWG NO D MSDS-XXPMMP-SF8001		CHECKED BY Jinhai	DATE 2016-08-24
CUSTOMER ALTW		APPROVED BY Jerry	DATE 2016-08-24

THIS DOCUMENT IS SUBJECT TO CHANGE WITHOUT NOTICE. IT IS CONFIDENTIAL AND A PROPERTY OF Amphenol LTW. DISCLOSURE TO THIRD PARTY HAS TO BE AUTHORIZED BY Amphenol LTW.