THIS DRAWING IS UNPUBLISHED. RELEASED FOR PUBLICATION - ,- .
© COPYRIGHT - By - ALL RIGHTS RESERVED.

REVISIONS					
P	LTR	DESCRIPTION	DATE	DWN	APVD
	C10	REVISED PER ECO-17-002273	10OCT2017	RK	AS

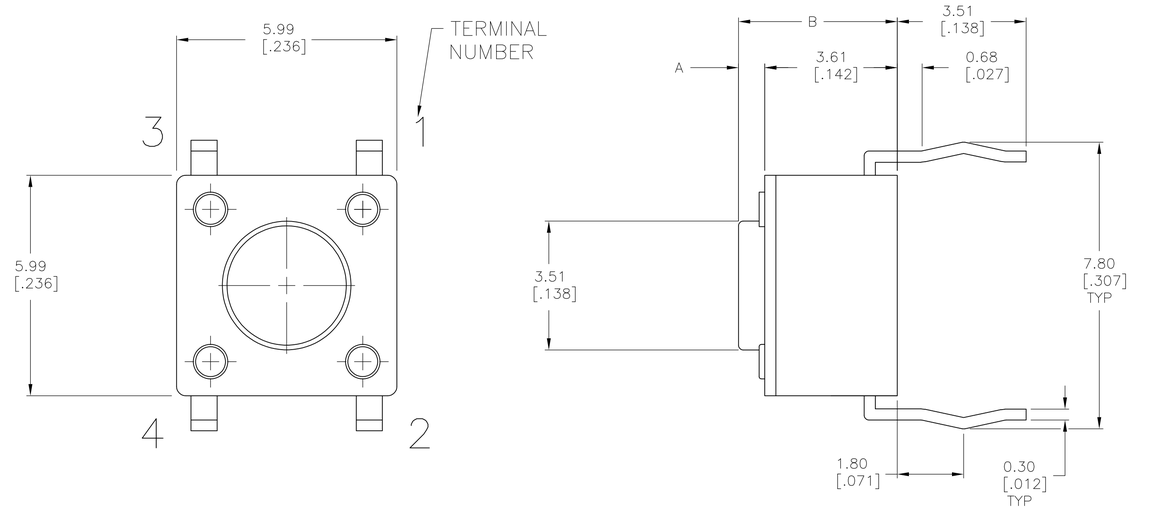

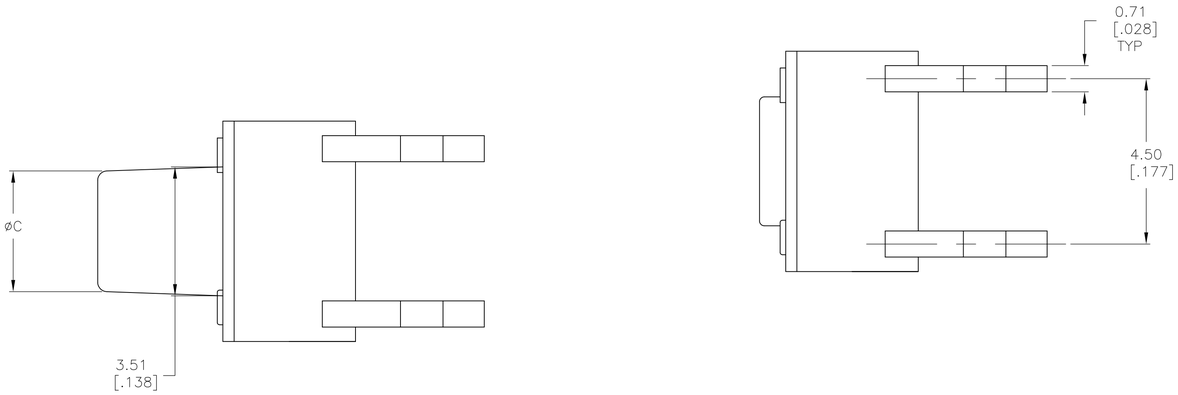

VIEW A–A
FSM6J THRU FSM18J

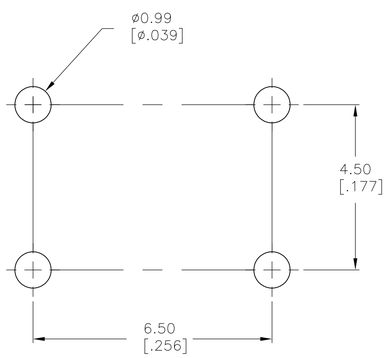

RECOMMENDED HOLE LAYOUT
TOLERANCE ±0.05[.002] UNLESS
OTHERWISE NOTED

( )–INDICATES MOMENTARY POSITION

CIRCUIT CHARACTERISTICS		
CONTACT POSITION		CIRCUIT DIAGRAM
OFF	(ON) 1–3 2–4	1 2 3 4

SPECIFICATIONS:

MATERIALS:
CASE: NYLON 66 UL94HB, 30% GF–BLACK
ACTUATOR: PBT OR NYLON 66 UL94HB, SEE P/N TABLE
COVER: PET FILM, WHITE FINISH
MOVING CONTACT: COPPER ALLOY–SILVER FINISH
FIXED CONTACT/TERMINAL: COPPER ALLOY–SILVER OVER NICKEL FINISH

ELECTRICAL:
MAX CONTACT RATING: 50MILLIAMPS@24V DC,
MIN CONTACT RATING: 10MICROAMPS@1V DC
INITIAL CONTACT RESISTANCE, 100 MILLIOHMS MAX
INSULATION RESISTANCE, 100 MEGOHM MIN. @ 100V DC
DIELECTRIC STRENGTH, 500 V AC FOR 1 MINUTE
LIFE EXPECTANCY, 100,000 CYCLES MIN (2 CYCLES PER SECOND AND 150% ACTUATION FORCE), EXCEPT FOR THE 520 GF MODEL WHICH WOULD BE 50,000 CYCLES MIN.

MECHANICAL:
ACTUATION FORCE, SEE TABLE
ACTUATION TRAVEL, .010 +.008/–.004
LIFE EXPECTANCY, 100,000 CYCLES MIN (2 CYCLES PER SECOND AND 150% ACTUATION FORCE), EXCEPT FOR THE 520 GF MODEL WHICH WOULD BE 50,000 CYCLES MIN.

ENVIRONMENTAL:
OPERATING TEMPERATURE, –35 TO +85 DEGREES C
STORAGE TEMPERATURE, –35 TO +85 DEGREES C
THERMAL SHOCK, PER EIA–364–32C, –35 TO +85 DEGREES C
SOLDERABILITY, PER EIA–364–52, CLASS 2, CATEGORY 1, CATEGORY 2, 95% MINIMUM COVERAGE
RESISTANCE TO SOLDER HEAT, PER 109–202, CONDITION B

Notes
1 ALL MATERIALS AND FINISHES SHALL COMPLY WITH EU DIRECTIVE 2002/95/EC OF 27JAN2003 (ROHS).

	NYLON 6/6	BROWN	100 +/–50 GF	3.30 (.130)	7.00 (.276)	3.40 (.134)	FSM6JLHTB	3–1825910–9
OBSOLETE	PBT	BROWN	100 +/–50 GF	N/A	5.00 (.196)	1.40 (.055)	FSM4JLHTB	3–1825910–8
OBSOLETE	NYLON 6/6	YELLOW	520 +/–100 GF	3.09 (.122)	8.50 (.335)	4.90 (.193)	FSM18JAAH	3–1825910–7
OBSOLETE	NYLON 6/6	RED	260 +/–50 GF	3.09 (.122)	8.50 (.335)	4.90 (.193)	FSM18JAH	~~3–1825910–6~~
	NYLON 6/6	BLACK	160 +/–50 GF	3.09 (.122)	8.50 (.335)	4.90 (.193)	FSM18JH	3–1825910–5
OBSOLETE	NYLON 6/6	BROWN	100 +/–50 GF	3.09 (.122)	8.50 (.335)	4.90 (.193)	FSM18JLH	3–1825910–4
	NYLON 6/6	YELLOW	520 +/–100 GF	2.80 (.110)	17.00 (.669)	13.40 (.527)	FSM16JAAH	3–1825910–3
	NYLON 6/6	RED	260 +/–50 GF	2.80 (.110)	17.00 (.669)	13.40 (.527)	FSM16JAH	3–1825910–2
	NYLON 6/6	BLACK	160 +/–50 GF	2.80 (.110)	17.00 (.669)	13.40 (.527)	FSM16JH	3–1825910–1
OBSOLETE	NYLON 6/6	BROWN	100 +/–50 GF	2.80 (.110)	17.00 (.669)	13.40 (.527)	FSM16JLH	~~3–1825910–0~~
	NYLON 6/6	YELLOW	520 +/–100 GF	2.87 (.113)	13.00 (.512)	9.40 (.370)	FSM14JAAH	2–1825910–9
	NYLON 6/6	RED	260 +/–50 GF	2.87 (.113)	13.00 (.512)	9.40 (.370)	FSM14JAH	2–1825910–8
	NYLON 6/6	BLACK	160 +/–50 GF	2.87 (.113)	13.00 (.512)	9.40 (.370)	FSM14JH	2–1825910–7
	NYLON 6/6	BROWN	100 +/–50 GF	2.87 (.113)	13.00 (.512)	9.40 (.370)	FSM14JLH	2–1825910–6
OBSOLETE	NYLON 6/6	YELLOW	520 +/–100 GF	3.20 (.126)	8.00 (.315)	4.40 (.173)	FSM12JAAH	2–1825910–5
OBSOLETE	NYLON 6/6	BLACK	260 +/–50 GF	3.20 (.126)	8.00 (.315)	4.40 (.173)	FSM12JABH	2–1825910–4
OBSOLETE	NYLON 6/6	RED	260 +/–50 GF	3.20 (.126)	8.00 (.315)	4.40 (.173)	FSM12JAH	2–1825910–3
	NYLON 6/6	WHITE	160 +/–50 GF	3.20 (.126)	8.00 (.315)	4.40 (.173)	FSM12JH	2–1825910–2
OBSOLETE	NYLON 6/6	BROWN	100 +/–50 GF	3.20 (.126)	8.00 (.315)	4.40 (.173)	FSM12JLH	2–1825910–1
OBSOLETE	NYLON 6/6	YELLOW	520 +/–100 GF	3.25 (.128)	7.30 (.287)	3.70 (.146)	FSM10JAAH	2–1825910–0
	NYLON 6/6	RED	260 +/–50 GF	3.25 (.128)	7.30 (.287)	3.70 (.146)	FSM10JAH	1–1825910–9
	NYLON 6/6	IVORY	160 +/–50 GF	3.25 (.128)	7.30 (.287)	3.70 (.146)	FSM10JH	1–1825910–8
OBSOLETE	NYLON 6/6	BROWN	100 +/–50 GF	3.25 (.128)	7.30 (.287)	3.70 (.146)	FSM10JLH	~~1–1825910–7~~
OBSOLETE	PBT	YELLOW	520 +/–100 GF	3.10 (.122)	9.50 (.374)	5.90 (.232)	FSM8JAAH	~~1–1825910–6~~
	PBT	RED	260 +/–50 GF	3.10 (.122)	9.50 (.374)	5.90 (.232)	FSM8JAH	1–1825910–5
	PBT	BLACK	160 +/–50 GF	3.10 (.122)	9.50 (.374)	5.90 (.232)	FSM8JH	1–1825910–4
	PBT	BROWN	100 +/–50 GF	3.10 (.122)	9.50 (.374)	5.90 (.232)	FSM8JLH	1–1825910–3
	NYLON 6/6	YELLOW	520 +/–100 GF	3.30 (.130)	7.00 (.276)	3.40 (.134)	FSM6JAAH	1–1825910–2
	NYLON 6/6	RED	260 +/–50 GF	3.30 (.130)	7.00 (.276)	3.40 (.134)	FSM6JAH	1–1825910–1
	NYLON 6/6	BLUE	160 +/–50 GF	3.30 (.130)	7.00 (.276)	3.40 (.134)	FSM6JH	1–1825910–0
	NYLON 6/6	BROWN	100 +/–50 GF	3.30 (.130)	7.00 (.276)	3.40 (.134)	FSM6JLH	1825910–9
	PBT	YELLOW	520 +/–100 GF	N/A	5.00 (.196)	1.40 (.055)	FSM4JAAH	1825910–8
	PBT	RED	260 +/–50 GF	N/A	5.00 (.196)	1.40 (.055)	FSM4JAH	1825910–7
	PBT	BLACK	160 +/–50 GF	N/A	5.00 (.196)	1.40 (.055)	FSM4JH	1825910–6
OBSOLETE	PBT	BROWN	100 +/–50 GF	N/A	5.00 (.196)	1.40 (.055)	FSM4JLH	1825910–5
OBSOLETE	PBT	YELLOW	520 +/–100 GF	N/A	4.30 (.169)	0.70 (.028)	FSM2JAAH	1825910–4
	PBT	RED	260 +/–50 GF	N/A	4.30 (.169)	0.70 (.028)	FSM2JAH	1825910–3
	PBT	NATURAL	160 +/–50 GF	N/A	4.30 (.169)	0.70 (.028)	FSM2JH	1825910–2
	PBT	BROWN	100 +/–50 GF	N/A	4.30 (.169)	0.70 (.028)	FSM2JLH	1825910–1
ACTUATOR MAT'L	**ACTUATOR COLOR**	**ACTUATION FORCE**	**DIM C**	**DIM B**	**DIM A**	**ALCO P/N**	**P/N**	

THIS DRAWING IS A CONTROLLED DOCUMENT.

DIMENSIONS: mm [INCHES]

TOLERANCES UNLESS OTHERWISE SPECIFIED:
0 PLC ± –
1 PLC ± –
2 PLC ± 0.30 [.012]
3 PLC ± –
4 PLC ± –
ANGLES ± –

MATERIAL: SEE SPECIFICATIONS
FINISH: –

DWN M.BINNER 07NOV06
CHK M.SARVER 07NOV06
APVD M.SARVER 07NOV06
PRODUCT SPEC –
APPLICATION SPEC –
WEIGHT

TE Connectivity

NAME: 6MM TACT SWITCH, THRU–HOLE HIGH TEMP

SIZE	CAGE CODE	DRAWING NO	RESTRICTED TO
A1	00779	C-1825910	–

CUSTOMER DRAWING | SCALE 12:1 | SHEET 1 OF 1 | REV C10

4805 (1/15)