SIGN	DATE	DESCRIPTION	APPROVER
1	2009.07.17	Add the inspection dimension	Jacke
2	2010.05.29	Add cULus standard	Jacke

THIS IS CAD DRAWING, DO NOT REVISE MANUALLY!!!

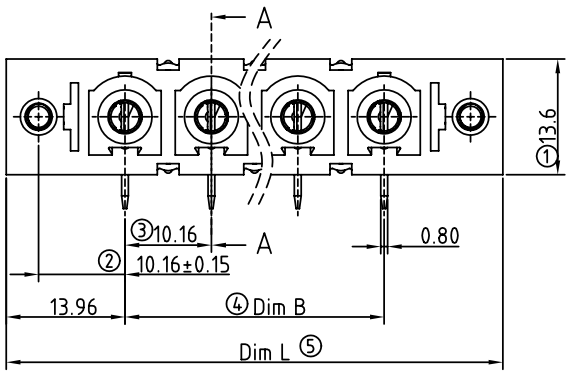

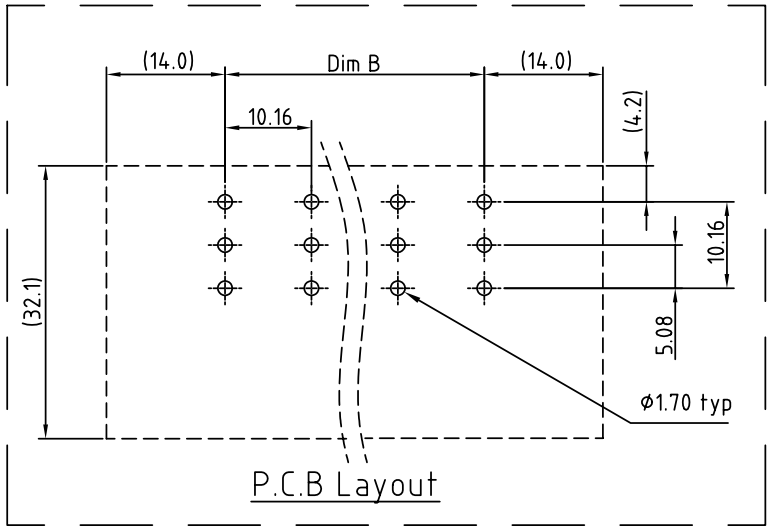

Material:

- Item a Terminal(housing): Thermoplastic (UL 94 - V0)
- Item b Male contact pin: Copper Tin plated
- Item c Wire guard:Stainless Steel
- Item d With flange nut : Steel zinc plated M3

Electrical: cULus / IEC

- Voltage rating:300V / 1000V
- Current rating:55A / 76A
- Withstanding Voltage:1.6 KV / 8 KV
- Operating temperature:-40°C to +115°C
- Soldering temperature:250°C±10°C/5 Sec
- Safety Approval: c UL us

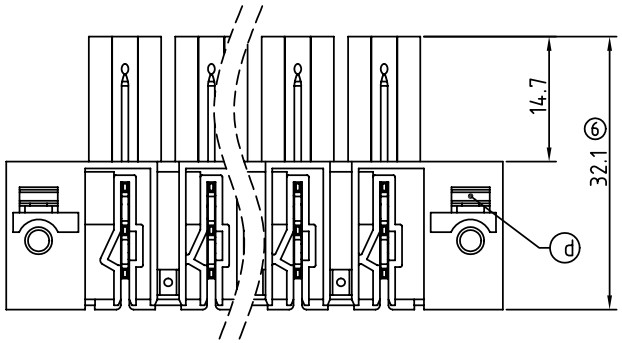

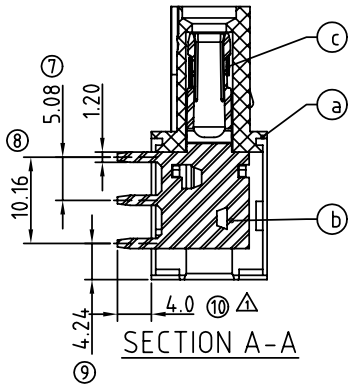

PART NO.

KL xx 62 x 1 xxxx G

No. OF POLES
02 2 CONTACTS
03 3 CONTACTS
... ...
12 12 CONTACTS

Color
0 Black (RAL9005)
2 Red (RAL3001/D)
3 Orange(RAL2011/P)
4 Yellow(RAL1018/A)
5 Green(RAL6018/T)
6 Blue (RAL5015/A)
8 Grey(RAL7035/D)

0000: "@" Logo (Standard)
000A: "ANYTEK" Mark
Any special item by customer requst. please contact sales department.

G: Pb<40000ppm

Poles	02	03	04	05	06	07	08	09	10	11	12
Dim L	38.08	48.24	58.40	68.56	78.72	88.88	99.04	109.20	119.36	129.52	139.68
Dim B	10.16	20.32	30.48	40.64	50.80	60.96	71.12	81.28	91.44	101.60	111.76
TOL	±0.25					±0.35					

ANYTEK

CUSTOMER COPY

ALL RIGHTS RESERVED. REPRODUCTION OR ISSUE TO THIRD PARTIES IN ANY FORM WHATEVER IS NOT PERMITTED WITHOUT WRITTEN AUTHORITY FROM THE PROPRIETOR. PROPERTY OF ANYTEK TECHNOLOGY CO., LTD

TITLE	KL 10.16 Series 2p-12p Right -Angle with flange (down)				
PART NO.	KLxx62x1xxxxG			DWG NO.	8KL0004
APPROVED	CHECKED	DESIGNED	DRAWN	CUST NO.	
		Jacke 2010.05.31	Jacke 2009.07.17	UNIT: mm / SCALE: NONE / SHEET: 01/01 / REV.: D	

Tolerance	
X.	±0.50
X.X	±0.30
X.XX	±0.10
X°	±1°