REACH & RoHS COMPLIANT

REV.	ECN / DESCRIPTION	BY	DATE
A0	NEW	X.YAN	2018.08.01

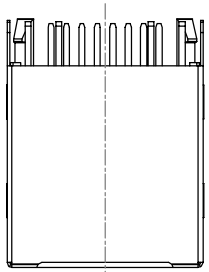

TOP VIEW

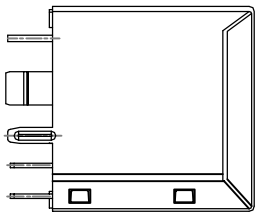

LEFT SIDE VIEW

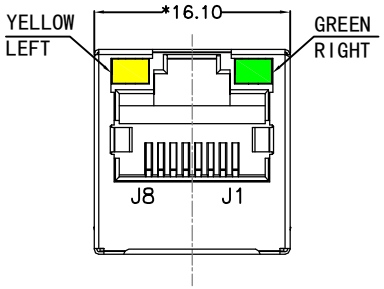

FRONT VIEW

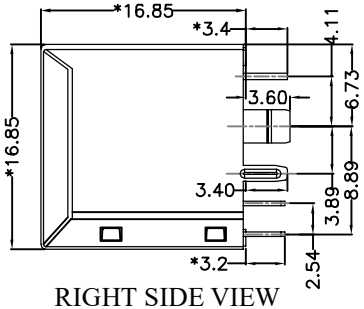

RIGHT SIDE VIEW

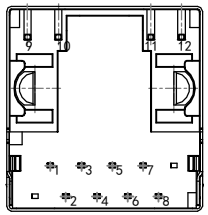

BACK VIEW

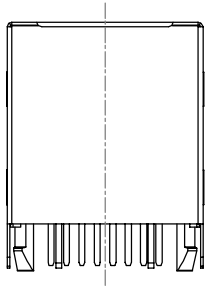

BOTTOM VIEW

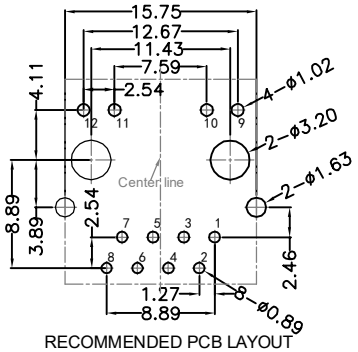

RECOMMENDED PCB LAYOUT
VIEWED FROM COMPONENT SIDE

MATERIAL:

HOUSING: PBT,UL94V-0,BLACK.
TERMINALS BRACKET: PBT,UL94V-0,BLACK.
SHIELD: C2680,T=0.20MM,NICKEL PLATING ON ALL AREA.
TERMINAL: PHOSPHOR BRONZE C5210,T=0.35MM,
6U" GOLD PLATING ON CONTACT AREA.

MECHANICAL:

DURABILITY: 750 CYCLES MIN.
MATING FORCE: 23N MAX.
OPERATING TEMPERATURE: -40°C~+85°C.
STORAGE TEMPERATURE: -40°C~+85°C.
ALL CRITICAL DIMENSIONS WITH "*"

CND-tek
磁联达
深圳磁联达电子有限公司
Shenzhen magnetic Lianda Electronics Co., LTD
Address: 505, West Block, No. 221, Niucheng Road, Niucheng Village, Baiwang Community, Xili Street, Nanshan District, Shenzhen
E-mail: sales1@cd-tek.com 0755-27652992 29016433 Website:www.cd-tek.com

TITLE:	SIZE	UNITS	GENERAL TOLERANCES UNLESS SPECIFIED		APPROVED BY:
180° TAB-UP 1X1 100BASE	A4	MM[INCH]			QG.CHEN
PART NO.:	SACLE	REV	x±0.35	x°±3.0°	CHECKED BY:
R915310A E	1:1	A0	.x±0.30	.x°±2.0°	SL.WANG
REMARK:	SHEET		.xx±0.25	.xx°±1.5°	DESIGND BY:
	1/4		.xxx±0.10	.xxx°±1.0°	X.YAN

REACH & RoHS COMPLIANT

REV.	ECN / DESCRIPTION	BY	DATE
A0	NEW	X.YAN	2018.08.01

Suggested Panel Opening:

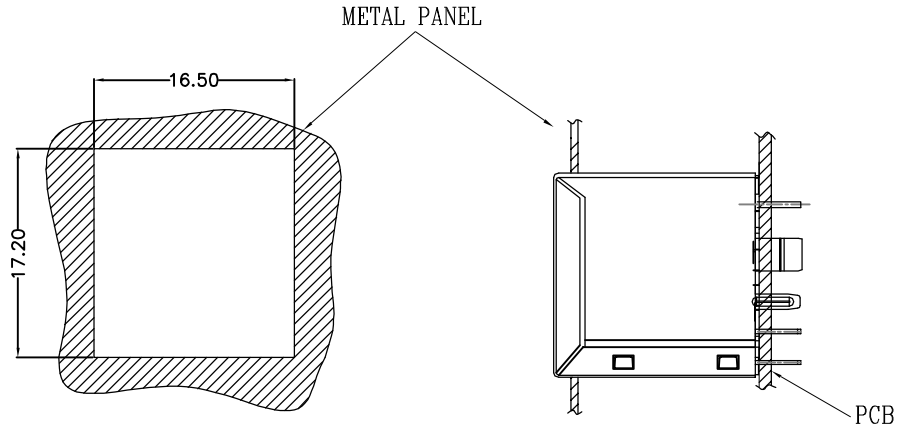

UNIT: mm / inch
Tolerances: ±0.10 / 0.004

Keep-Out Area (Component Side View):

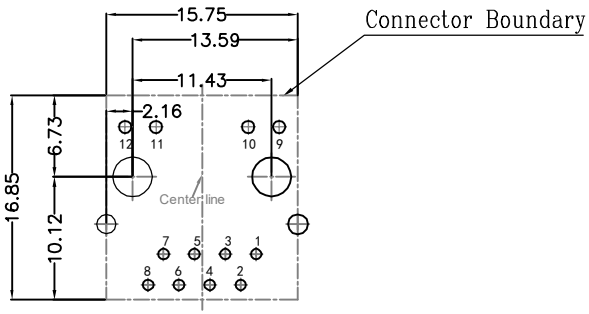

UNIT: mm / inch
Tolerances: ±0.10 / 0.004

CND-tek
磁联达
深圳磁联达电子有限公司
Shenzhen magnetic Lianda Electronics Co., LTD
Address: 505, West Block, No. 221, Niucheng Road, Niucheng Village, Baiwang Community, Xili Street, Nanshan District, Shenzhen
E-mail: sales1@cd-tek.com 0755-27652992 29016433 Website:www.cd-tek.com

TITLE:	SIZE	UNITS	GENERAL TOLERANCES UNLESS SPECIFIED		APPROVED BY:
180° TAB-UP 1X1 100BASE	A4	MM[INCH]			QG.CHEN
PART NO.: R915310A E	SACLE 1:1	REV A0	x±0.35	x°±3.0°	CHECKED BY: SL.WANG
			.x±0.30	.x°±2.0°	
REMARK:	SHEET 2/4		.xx±0.25	.xx°±1.5°	DESIGND BY: X.YAN
			.xxx±0.10	.xxx°±1.0°	

REACH & RoHS COMPLIANT

REV.	ECN / DESCRIPTION	BY	DATE
A0	NEW	X.YAN	2018.08.01

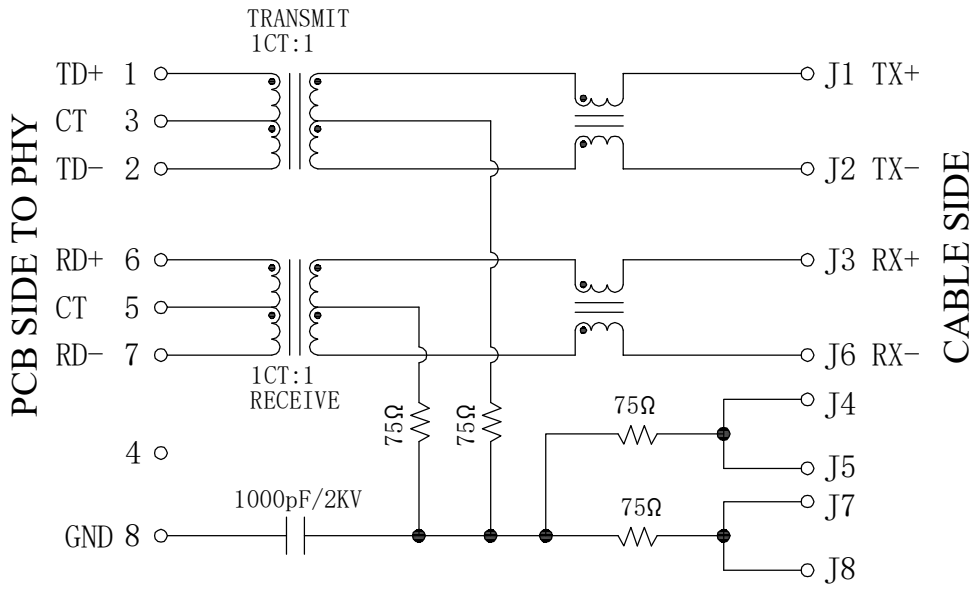

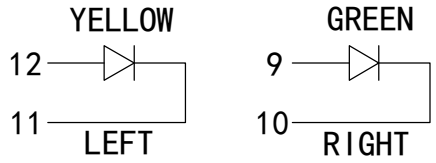

Electrical:

1.Turn ratio:1~2:J1~J2=1CT:1CT(±2%).
6~7:J3~J6=1CT:1CT(±2%).
2.OCL:350uH Min.at 100KHz 100mV 8mA DC.
3.Insertion Loss: -1.0 dB Max 1~100MHz.
4.Return loss: -20dB Min 1~10MHz;
-16dB Min 10~30MHz.
-12dB Min 30~60MHz.
-10dB Min 60~80MHz.
5.Cross talk: -40dB Min 1~30MHz;
-35dB Min 30~60MHz;
-30dB Min 60~100MHz;
6.CMR: -30dB Min 1~100MHz;
7.Hi-Pot:1500V AC & 2250V DC
6S 1mA PRI TO SEC

LED Specification

Standard LED Color	LED Wavelength	Foward(A)	Foward(V)
Green	568nm	20mA	1.85-2.45V
Yellow	585nm	20mA	1.7-2.2V

CND-tek
磁联达
深圳磁联达电子有限公司
Shenzhen magnetic Lianda Electronics Co., LTD
Address: 505, West Block, No. 221, Niucheng Road, Niucheng Village, Baiwang Community, Xili Street, Nanshan District, Shenzhen
E-mail: sales1@cd-tek.com 0755-27652992 29016433 Website:www.cd-tek.com

TITLE:	SIZE	UNITS	GENERAL TOLERANCES UNLESS SPECIFIED		APPROVED BY:
180° TAB-UP 1X1 100BASE	A4	MM[INCH]			QG.CHEN
PART NO.: R915310A E	SACLE 1:1	REV A0	x±0.35 / .x±0.30	x°±3.0° / .x°±2.0°	CHECKED BY: SL.WANG
REMARK:	SHEET 3/4		.xx±0.25 / .xxx±0.10	.xx°±1.5° / .xxx°±1.0°	DESIGND BY: X.YAN

REACH & RoHS COMPLIANT

PROFILE OF WAVE SOLDER

REV.	ECN / DESCRIPTION	BY	DATE
A0	NEW	X.YAN	2018.08.01

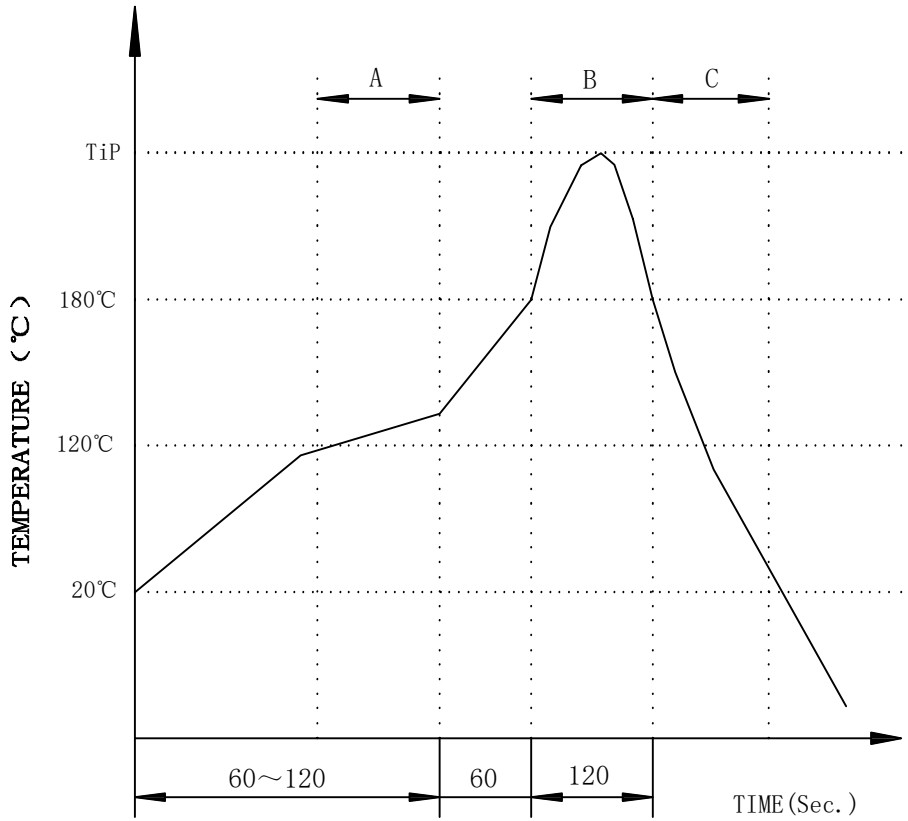

A.Preheating B.Soldering C.Gradual Cooling
Tip temperature:260±5°C.
Tip temperature time:5Sec Max.
Tip melting point of Sn96.5/Ag3/Cu0.5:217°C.

Remarks: after wave soldering, the plastic positioning columns of the product which under the PCB will be slightly melted, but it won't affect its function.

CND-tek
磁联达
深圳磁联达电子有限公司
Shenzhen magnetic Lianda Electronics Co., LTD
Address: 505, West Block, No. 221, Niucheng Road, Niucheng Village, Baiwang Community, Xili Street, Nanshan District, Shenzhen
E-mail: sales1@cd-tek.com 0755-27652992 29016433 Website:www.cd-tek.com

TITLE:	SIZE	UNITS	GENERAL TOLERANCES UNLESS SPECIFIED		APPROVED BY:
180° TAB-UP 1X1 100BASE	A4	MM[INCH]			QG.CHEN
PART NO.: R915310A E	SACLE 1:1	REV A0	x±0.35 / .x±0.30	x°±3.0° / .x°±2.0°	CHECKED BY: SL.WANG
REMARK:	SHEET 4/4		.xx±0.25 / .xxx±0.10	.xx°±1.5° / .xxx°±1.0°	DESIGND BY: X.YAN