RoHS

REV	ECN NO.	DESRIPTION	DESIGN	APPROVAL	DATE
A1	NEW	新版发行			2025.03.05

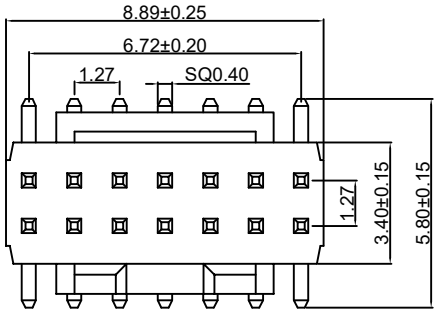

SPECIFICATIONS
1. Current rating: 1A AC, DC
2. Temperature range: -40°C ~ +105°C
3. Insulation resistance: 1000MΩ Min.
4. Withstanding voltage: 500V AC/ minute.
5. Contact resistance: 20mΩ Max.

Material:
Insulator Material:LCP (UL 94V-0)
Contact Material:Brass
Plating: Au of Sn Over Ni

Ordering Code:

BH127VS-12-14-H25-L70-R
1 2

1.序列号
2.Pin位数: 2x07=14P

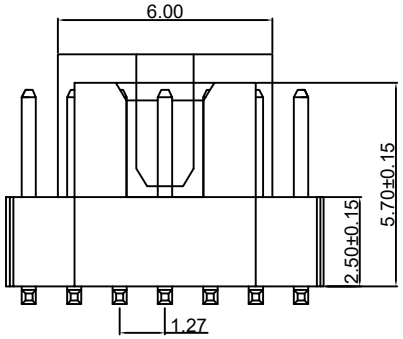

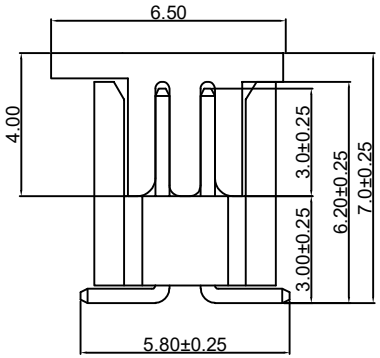

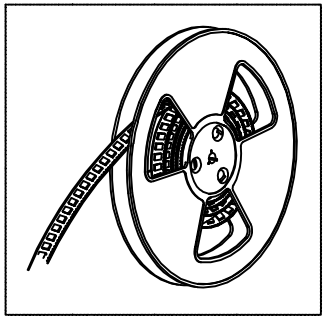

卷装图

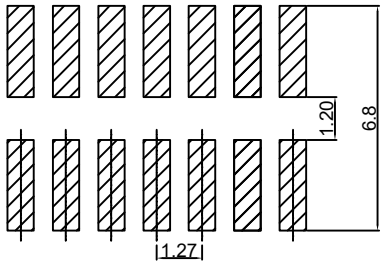

PCB LAYOUT

X.±0.50	X.°±
.X±0.25	.X°±
.XX±0.15	.XX°±
.XXX±0.10	.XXX°±
UNITS:	mm

PART NO: BH127VS-12-14-H25-L70-R

TITLE: 简牛 1.27mm SMD 2x07P H2.5带围墙 SMD5.8mm 镀金 LCP 加盖卷装

XFCN兴飞连接器

0769-82001899

www.xfconn.com

DWG NO: /

APPD	Chen ZhiQiang			
CHKD	Liu Wei	VIEW		
DRAW	Chen HongJiang	SCALE	SHEET	REV
DATE	2025.03.05	NONE	1/1	A1

THESE DRAWINGS AND SPECIFICATIONS ARE THE PROPERTY OF XFCN AND SHALL NOT BE REPRODUCED,COPIED OR CUED IN ANY MANNER WITHOUT THE PRIOR WRITTEN CONSENT OF XFCN