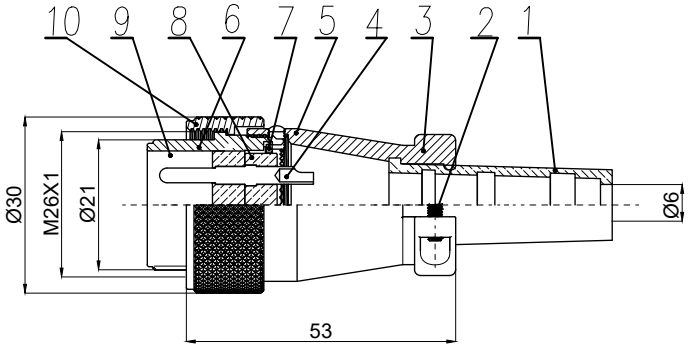


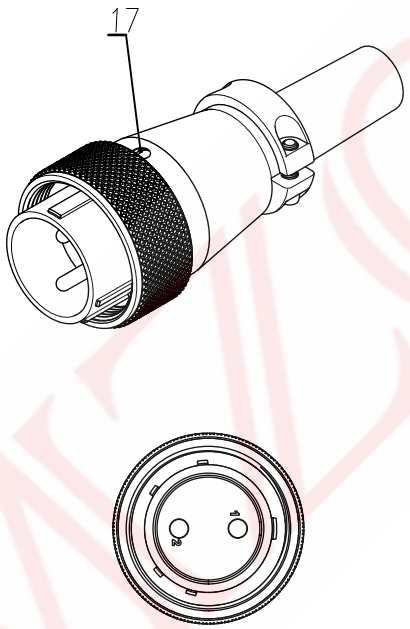


## 技术参数

| | |
|---|---|
| 芯数 | 2 |
| 额定电流 / 电压 | 25A500V |
| 接触体直径 | 2.5mm |
| 耐电压 1 分钟 | 1500V |
| 绝缘抗阻抗 | 2000MΩ |

1)、图中未注公差为±0.5

2)、使用温度范围 -25° C/+60° C

3)、接触体表面常规镀铬

4)、接触体焊线面均按图中箭头所指方向

| 序号 (Number) | 图号 (Part No) | 名称 (Name) | 物料编号 (Number) | 数量 (Quantity) | 材料 (Matl) | 处理 (TREAT) | 序号 (Number) | 图号 (Part No) | 名称 (Name) | 物料编号 (Number) | 数量 (Quantity) | 材料 (Matl) | 处理 (TREAT) |
|---|---|---|---|---|---|---|---|---|---|---|---|---|---|
| 10 | W24-A-10 | 连接螺帽 | 0225000301 | 1 | 锌 | 镀铬 | | | | | | | |
| 9 | W24-A-5-(2)P | 2P针座 | 0227000902 | 1 | PPS | | | | | | | | |
| 8 | W24-A-6-(2)P | 2P针座盖 | 022700102 | 1 | PPS | | | | | | | | |
| 7 | W24-A(B)-7 | 卡簧 | 0226001100 | 1 | 不锈钢 | | 17 | W16-A-8 | 中心固定螺丝 | 0119001601 | 1 | 黄铜 | |
| 6 | W24-A-12 | 连接插头 | 0226001700 | 1 | 锌 | 镀铬 | | | | | | | |
| 5 | W24-A-1 | 直式头外壳 | 0226000100 | 1 | 锌 | 镀铬 | | | | | | | |
| 4 | W20-A-4-2.5P | 2.5mm插针 | 0220000503 | 2 | 59-1铜 | 镀金 | | | | | | | |
| 3 | W24-A-2 | 压线盖 | 0250000240 | 1 | 锌 | 镀铬 | | | | | | | |
| 2 | W24-A-9 | 压线盖螺丝 | 0125002400 | 6 | 铸钢 | 镀镍 | | | | | | | |
| 1 | W24-A-11 | 橡胶管 | 0226002400 | 1 | 硅橡胶 60° | | | | | | | | |

WS24-T-02-V-P

- Interface Type: Pin
- Mold Number: V083
- Pin Layout:02-19PIN
- Port: T-Male
- Series:WS24

SAMZO COMPONENTS

Electronic switch and connector manufacturer

| GENERAL TOLERANCE | |
|---|---|
| ≥0~2< | ±0.15 |
| ≥2~5< | ±0.25 |
| ≥0~2< | ±0.15 |
| ≥5 | ±0.35 |

FIRST VIEW

| SCALE | 1:1 | UNIT | mm |
|---|---|---|---|

The copyright belongs to samzo parts [China] Co., Ltd. please use the material after samzo parts agree to authorize. The final right of interpretation belongs to samzo parts.
WWW.KKK-JP.COM

| REV | ECN NO | DESRIPTION | DESIGN | APPROVAL | DATE | | | | |
|---|---|---|---|---|---|---|---|---|---|
| A1 | NEW | Replace frame | | | 2013.02.12 | | CHECKED | ZHENGUILAN | 2013.02.12 |
| | | | | | | | APPROVED | LILIANJIANG | 2013.02.14 |

DESIGN: WANGGUIFA 2013.02.12

REAC/ROHS

TITLE:: WS24插针公插头

PART NO: WS24-T-02-V-P

DWG NO: WS24-V083

MODEL NO: WS24TV02A

NAME: Aviation connector

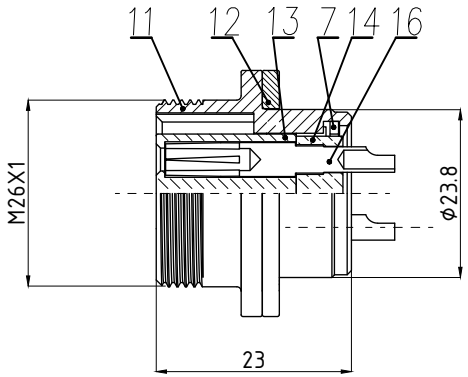


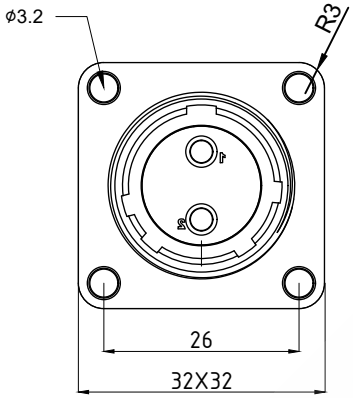


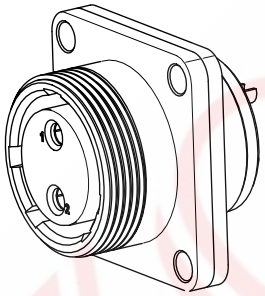

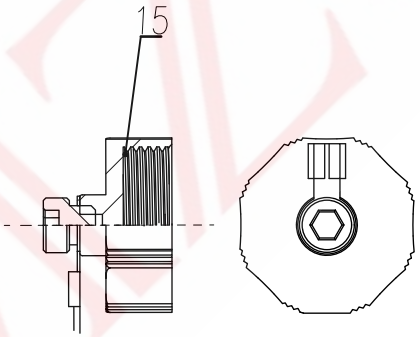


## 技术参数

| | |
|---|---|
| 芯数 | 2 |
| 额定电流 / 电压 | 25A500V |
| 接触体直径 | 2.5mm |
| 耐电压 1 分钟 | 1500V |

1)、图中未注公差为±0.5

2)、使用温度范围 -25° C/+60° C

3)、接触体表面常规镀铬

4)、接触体焊线面均按图中箭头所指方向

| 序号 (Number) | 图号 (Part No) | 名称 (Name) | 物料编号 (Number) | 数量 (Quantity) | 材料 (Matl) | 处理 (TREAT) |
|---|---|---|---|---|---|---|
| 7 | W24-A(B)-7 | 卡簧 | 0226001100 | 1 | 不锈钢 | |

| 序号 (Number) | 图号 (Part No) | 名称 (Name) | 物料编号 (Number) | 数量 (Quantity) | 材料 (Matl) | 处理 (TREAT) |
|---|---|---|---|---|---|---|
| 16 | W20-A-4-2.5S | 2.5mm插孔 | 0220000604 | 2 | 59-1 | 镀金 |
| 15 | W24-B2-2 | 座防尘盖 | | 1 | PA | |
| 14 | W24-B-2-2P | 2P孔座盖片 | 0227000702 | 1 | PPS | |
| 13 | W24-B-2P | 2P孔座 | 0226000702 | 1 | PPS | |
| 12 | W24-B-8 | 方座垫片 | 0226002600 | 1 | 橡胶 | |
| 11 | W24-B-1 | 方座外壳 | 0226000400 | 1 | 锌 | 镀铬 |

WS24-Z-02-V-S

- Interface Type: Hole
- Mold Number: V042
- Pin Layout:02-19PIN
- Port: Z-Female
- Series:WS24

SAMZO COMPONENTS

Electronic switch and connector manufacturer

| GENERAL TOLERANCE | |
|---|---|
| ≥0~2< | ±0.15 |
| ≥2~5< | ±0.25 |
| ≥0~2< | ±0.15 |
| ≥5 | ±0.35 |

FIRST VIEW

| SCALE | 1:1 | UNIT | mm |
|---|---|---|---|

The copyright belongs to samzo parts [China] Co., Ltd. please use the material after samzo parts agree to authorize. The final right of interpretation belongs to samzo parts.
WWW.KKK-JP.COM

| REV | ECN NO | DESRIPTION | DESIGN | APPROVAL | DATE | | | | |
|---|---|---|---|---|---|---|---|---|---|
| A1 | NEW | Replace frame | | | 2013.02.12 | | CHECKED | ZHENGUILAN | 2013.02.12 |
| | | | | | | | APPROVED | LILIANJIANG | 2013.02.14 |

| | | |
|---|---|---|
| DESIGN | WANGGUIFA | 2013.02.12 |

REAC/ROHS

TITLE:: WS24方形母插孔

PART NO: WS24-Z-02-V-S

DWG NO: WS24-V042

MODEL NO: WS24ZV02A

NAME: Aviation connector