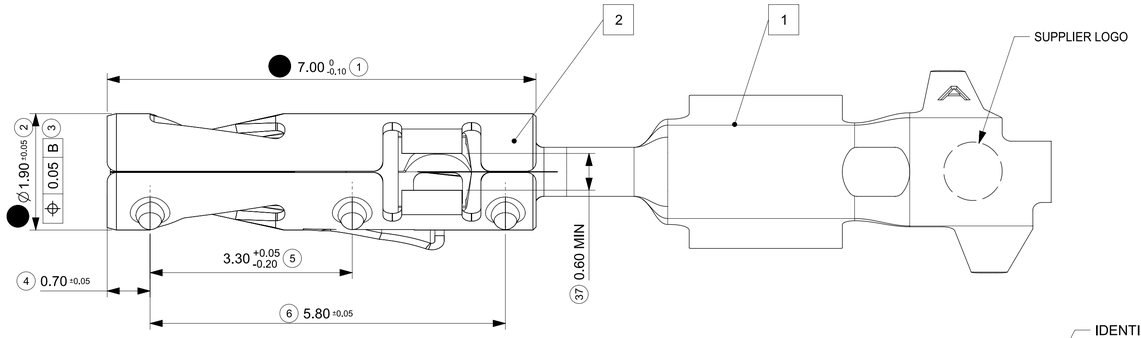

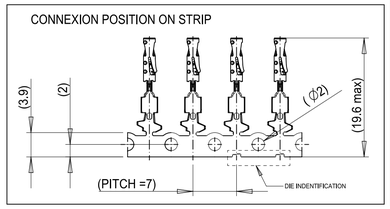

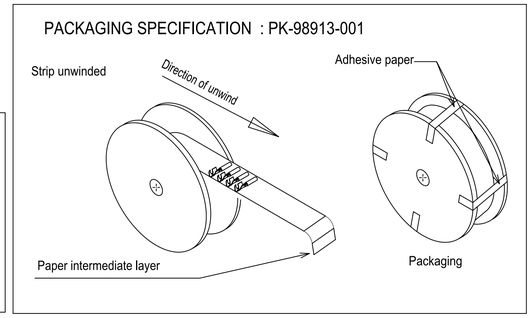

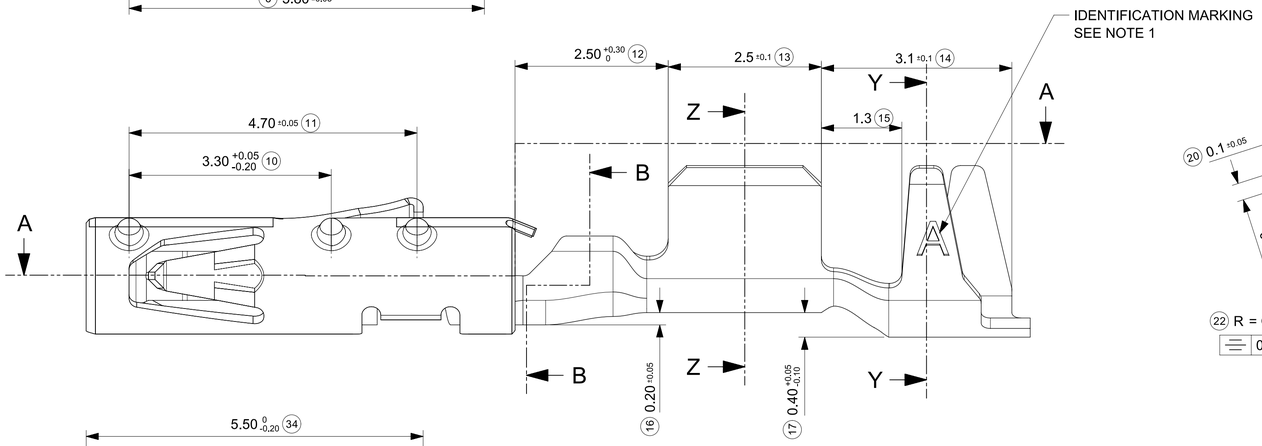

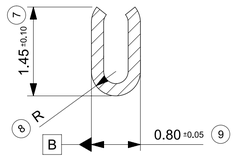

B-B

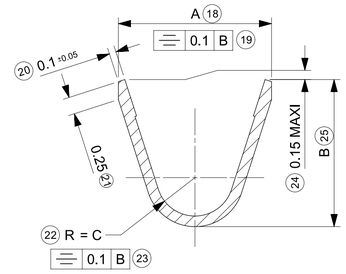

Z-Z

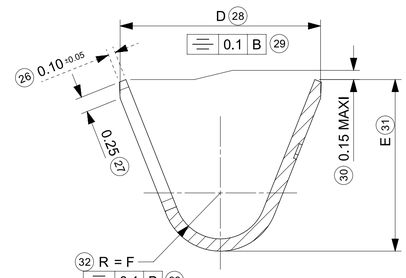

Y-Y

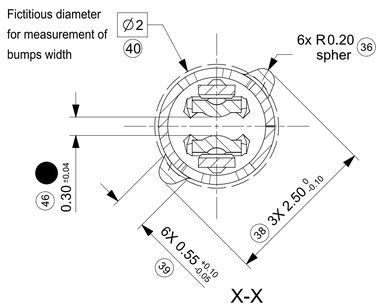

X-X

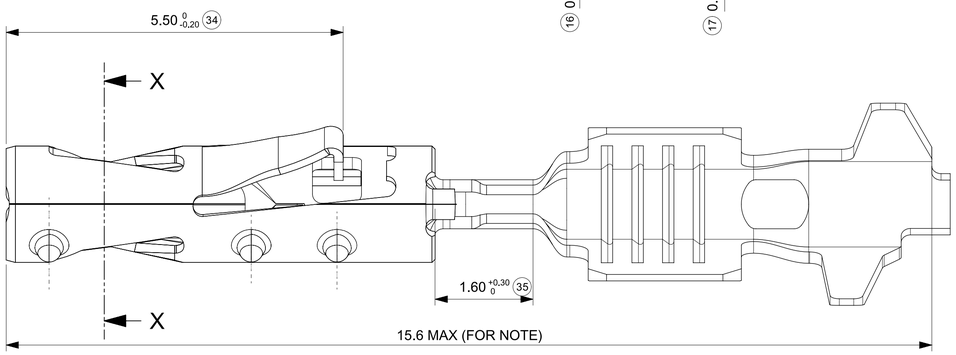

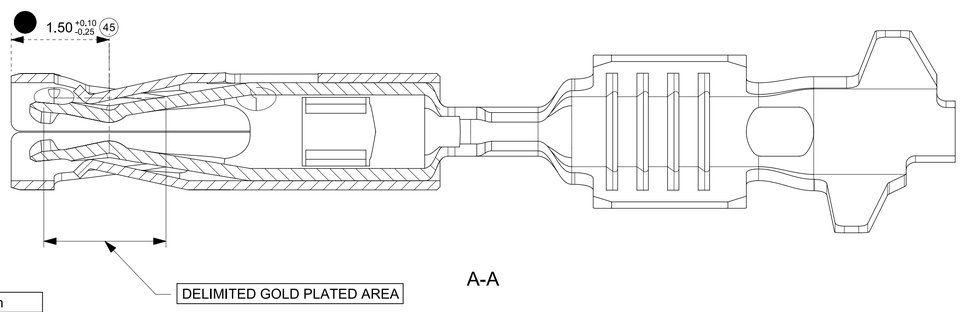

A-A

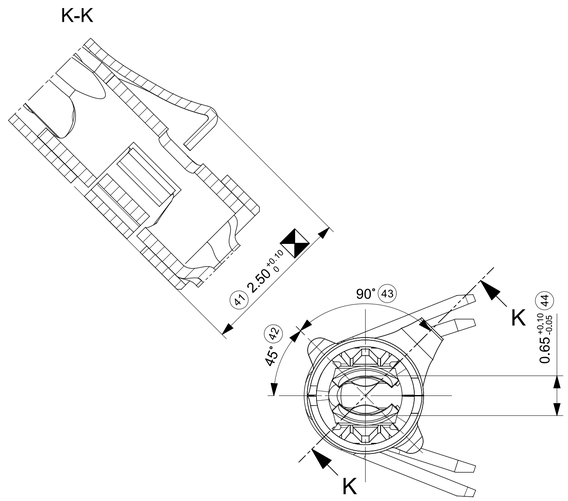

NOTE :
- MARKING "A" is used to identify "STANDARD" terminal
- CRIMPING SPECIFICATION ACCORDING TO AS-64322-001

MARK	DESIGNATION	MATERIAL
2	BOX TERMINAL	STAINLESS STEEL thickness=0.15 mm
1	BODY TERMINAL	hight conductivity copper alloy thickness=0.2 mm

PART NUMBER	CONTACT AREA	CRIMPING AREA	UNDERLAYER	CRIMPING RANGE (mm2)	A±0.2	B±0.2	rC +0.15 -0.1	D±0.2	E±0.2	rF±0.1	WEIGHT (g)
	PLATING										
0643221029	Sn	Sn		0.75	2.5	2.4	0.6	3.3	2.8	0.75	0.119
0643221219	Au 1.27µ MINI	Sn	Ni								
0643221039	Sn	Sn		0.50	2.3	2.2	0.6	3.1	2.6	0.75	0.117
0643221239	Au 1.27µ MINI	Sn	Ni								
0643221019	Sn	Sn		0.22 to 0.44	2.0	1.7	0.6	3.1	2.6	0.75	0.112
0643221229	Au 1.27µ MINI	Sn	Ni								

(SKC)	COTES CARACTERISTIQUES SPECIALES SPECIAL KEY CHARACTERISTICS
⧗	INDICATION DIMENSIONS S.P.C DENOTES S.P.C DIMENSIONS
⊗	INDICATION DIMENSIONS CRITIQUES DENOTES CRITICAL DIMENSIONS
●	INDICATION DIMENSIONS FONCTIONNELLES DENOTES FUNCTIONAL DIMENSIONS
QUANTITE PAR FEUILLE INDIVIDUELLE QUANTITY PER INDIVIDUAL SHEET	
⧗ 1	⊗ 0 ● 4 (SKC) 0

THIS DRAWING CONTAINS INFORMATION THAT IS PROPRIETARY TO MOLEX ELECTRONIC TECHNOLOGIES, LLC AND SHOULD NOT BE USED WITHOUT WRITTEN PERMISSION

FUNCTIONAL SYMBOLS: = 0 / = 0 / = 0
DIVISIONAL SYMBOLS

DIMENSION UNITS	SCALE
mm	20:1

GENERAL TOLERANCES (UNLESS SPECIFIED)

ANGULAR TOL	± 2°
4 PLACES	± 0.10000
3 PLACES	± 0.1000
2 PLACES	± 0.100
1 PLACE	± 0.10
0 PLACES	± 0.10

DRAFT WHERE APPLICABLE MUST REMAIN WITHIN DIMENSIONS

CURRENT REV DESC: Dim 5 and Dim 10 tolerance update

STATUS: Production
DRWN: Nitin Venkatesh Shet 2024-01-25
CHK'D: Nitin Venkatesh Shet 2024-01-30
APPR: ChandrashekarS 2024-01-30

FIRST ANGLE PROJECTION | DRAWING: A1-SIZE | SERIES: 64322

molex

CP RCPT TRM 0.6

PRODUCT SALES DRAWING

DOCUMENT NUMBER	DOC TYPE	DOC PART	REVISION
SD-64322-001	PSD	000	E2

MATERIAL NUMBER | CUSTOMER: GENERAL MARKET | SHEET NUMBER: 1 OF 1

FORMAT TC0Ø0A0R1
REVISION B
DATE 2022/06/01