CND-tek

磁联达

G2474CE T

EN

100/1000M POE+ Single Port Transformer Module

1. Designed for long haul Gigabit Ethernet 1000 Base-T, full duplex applications.
2. Supports four pairs of category 5 UTP cable.
3. Cable interface for isolation and low common mode emissions
4. Compliant with IEEE 802.3at standard for 1000 Base-Tesigned to support 1:1 Turns Ratio Transceivers.
5. Suitable For End-apan and Mid-span POE+ Applications 720mA Current Capadility Per POE Port
6. Operating Temperature range: -40℃ TO +85℃
7. torage temperature range: -40℃ TO +125℃

DIMENSIONS & SCHEMATICS

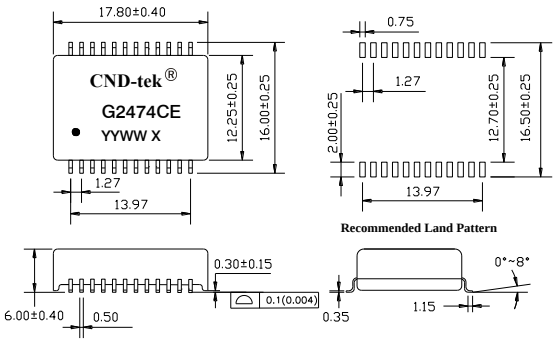

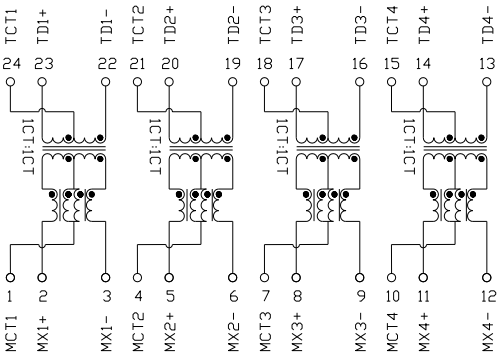

Note: 1、Dimension：mm, 2.Unless otherwise specified,tolerances are: ±0.15mm

TECHNICAL SPECIFICATIONS

OCL :	350 μH Min. @ 100 KHz, 100mV with 11mA DC Bias
Leakage	0.5 μH Max. @ 100KHz, 0.1V
Inductance: Cw/w:	28pF Max. @ 100KHz, 0.1V
DCR:	1.20 Ω Max.
Turns Ratio(±5%):	1CT:1CT(TX), 1CT:1CT(RX)
Polarity:	1-24, 4-21, 7-18, 10-15 In-Phase
Insertion Loss:	-1.0 dB Max. @ 1-100M
Return Loss:	-18dB Min. @ 1-30MHz -14 dB Min. @ 30-60 MHz -12dB Min.@ 60-80 MHz -10dB Min.@ 80-100 MHz
Cross Talk:	-40 dB Min.@ 30 MHz -35 dB Min.@ 60 MHz -30 dB Min.@ 100 MHz
Common Mode Rejection :	-40 dB Min.@ 30 MHz -35 dB Min.@ 60 MHz -30 dB Min.@ 100 MHz
Isolation HI-POT:	1500Vrms 1mA 1Second

PACKING SPECIFICATION

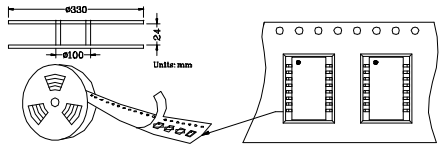

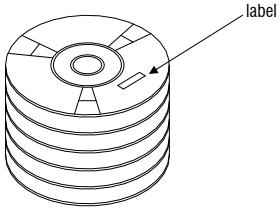

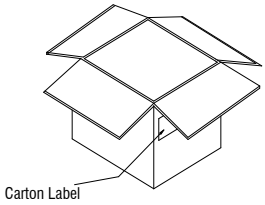

1. units/reel:400PCS
2. reel/carton:5PCS
3. units/carton :2000PCS

EXPORT CARTON:367(L)x337(W)x235(H)