CND-tek
磁联达

HX0068ANLTP

EN

10/100M PC CARD Transformer Module

1. Compatible with various 10/100 Base-TX PC CARD Transformer.
2. Compliant with IEEE 802.3ab standard including baseline wander compensation specification of 350μH OCL when Biased at 8mA
3. Low profile Surface Mount Packaging designed for Hi-Temp Reflow Process
4. Single channel interface for 10/100Mbps Ethernet applications with CMC's tuned to Enhance EMC system performance
5. Operating Temperature range: -40℃ TO +85℃
6. Storage temperature range: -40℃ TO +125℃

DIMENSIONS & SCHEMATICS

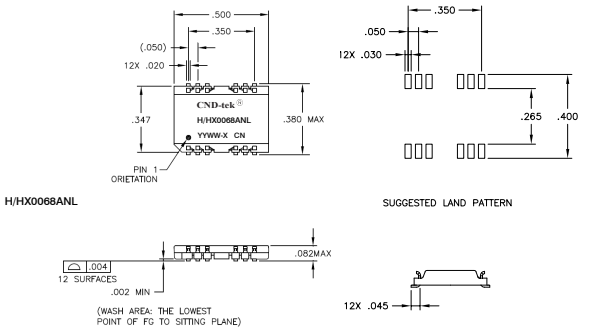

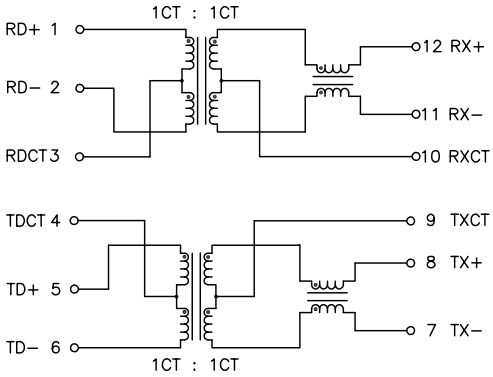

Note: 1、Dimension: inches/mm 2.Unless otherwise specified,tolerances are: ± 0.15mm

TECHNICAL SPECIFICATIONS

OCL :	350 μH Min. @ 100 KHz, 0.1V with 8mA DC Bias
Leakage	0.5 μH Max. @ 100KHz, 0.1V
Inductance: Cw/w:	28pF Max. @ 100KHz, 0.1V
DCR:	1.00 Ω Max.
Turns Ratio(±2%):	1CT:1CT
Insertion Loss:	-1.0 dB Max. @ 0.1-100MHz
Return Loss:	-16dB Min.@ 30 MHz -14dB Min@60 MHz -12dB Min.@ 80 MHz
Cross Talk:	-45dB Min. @ 30MHz -40dB Min@ 62MHz -37dB Min@ 100MHz
Common Mode Rejection :	-40dB Min.@ 30MHz -35dB Min@ 50 MHz -30dB Min@ 100 MHz
Isolation HI-POT:	1500Vrms 1mA 60Second

PACKING SPECIFICATION

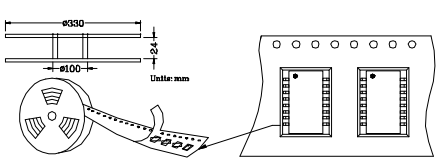

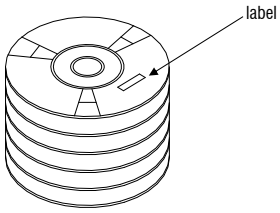

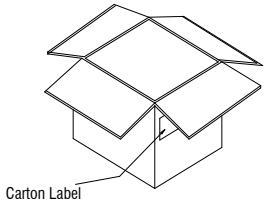

1. units/reel:2000PCS
2. reel/carton:5PCS
3. units/carton :10000PCS

EXPORT CARTON:367(L)x337(W)x235(H)

Shenzhen magnetic Lianda Electronics Co., LTD

Address: 505, West Block, No. 221, Niucheng Road, Niucheng Village, Baiwang Community, Xili Street, Nanshan District, Shenzhen
E-mail: sales1@cd-tek.com 0755-27652992 29016433 Website:www.cd-tek.com