© – TE Connectivity. All Rights Reserved.

REVISIONS					
P	LTR	DESCRIPTION	DATE	DWN	APVD
	L1	REVISED PER ECN-22-164704	15JUL2022	RK	MF

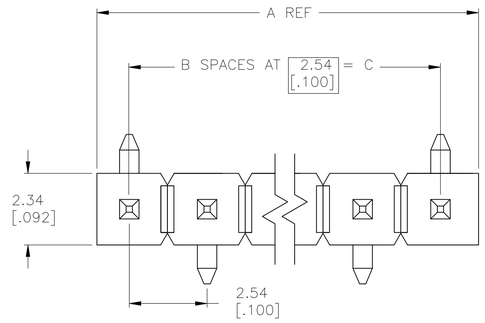

1. THE NOTED DIMENSIONS APPLY AT THE INTERSECTION OF THE POST AND THE HOUSING.
2. 0.000762[.000030] GOLD ON CONTACT AREA, 0.00254[.000100]–0.00508[.000200] MATTE TIN–LEAD ON SOLDER TAIL, ALL OVER 0.00127[.000050] NICKEL.
3. HOUSING: LCP, COLOR–BLACK. POSTS: COPPER ALLOY.
4. 0.000762[.000030] GOLD ON CONTACT AREA, 0.00254[.000100]–0.00508[.000200] MATTE TIN ON SOLDER TAIL, ALL OVER 0.00127[.000050] NICKEL.
5. OBSOLETE PARTS: OBSOLETE CIS STREAMLINING PER D.RENAUD/D.SINISI

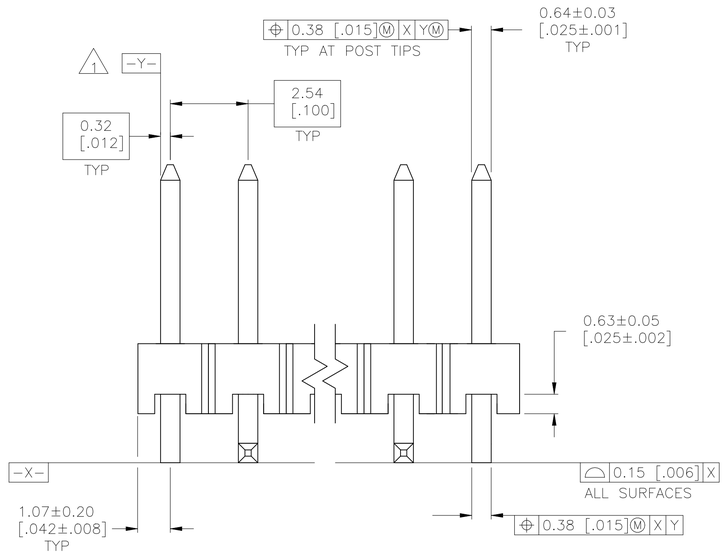

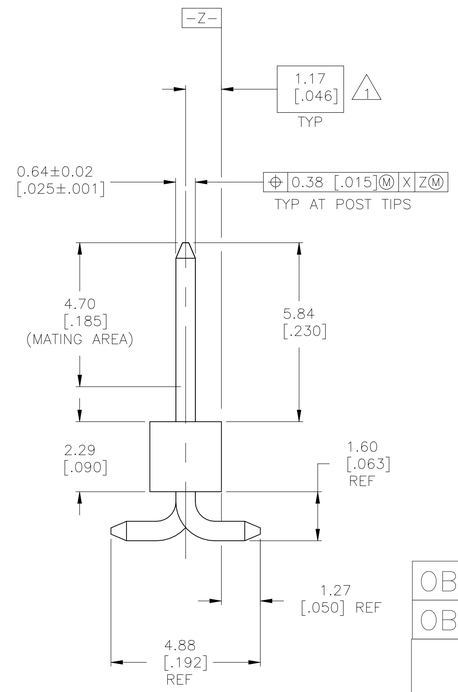

	4	35.56 [1.400]	14	35.69 [1.484]	15	6–146128–3
	4	33.02 [1.300]	13	33.15 [1.384]	14	6–146128–2
	4	30.48 [1.200]	12	30.61 [1.284]	13	6–146128–1
	4	27.94 [1.100]	11	28.07 [1.184]	12	6–146128–0
	4	25.40 [1.000]	10	27.53 [1.084]	11	5–146128–9
	4	22.86 [.900]	9	24.99 [.984]	10	5–146128–8
	4	20.32 [.800]	8	22.45 [.884]	9	5–146128–7
	4	17.78 [.700]	7	19.91 [.784]	8	5–146128–6
	4	15.24 [.600]	6	17.37 [.684]	7	5–146128–5
	4	12.70 [.500]	5	14.83 [.584]	6	5–146128–4
	4	10.16 [.400]	4	12.29 [.484]	5	5–146128–3
	4	7.62 [.300]	3	9.75 [.384]	4	5–146128–2
	4	5.08 [.200]	2	7.21 [.284]	3	5–146128–1
OBSOLETE	2	35.56 [1.400]	14	35.69 [1.484]	15	~~1–146128–3~~
OBSOLETE	2	33.02 [1.300]	13	33.15 [1.384]	14	~~1–146128–2~~
5 OBSOLETE	2	30.48 [1.200]	12	30.61 [1.284]	13	~~1–146128–1~~
	2	27.94 [1.100]	11	28.07 [1.184]	12	~~1–146128–0~~
	2	25.40 [1.000]	10	27.53 [1.084]	11	~~146128–9~~
	2	22.86 [.900]	9	24.99 [.984]	10	~~146128–8~~
OBSOLETE	2	20.32 [.800]	8	22.45 [.884]	9	~~146128–7~~
OBSOLETE	2	17.78 [.700]	7	19.91 [.784]	8	~~146128–6~~
5 OBSOLETE	2	15.24 [.600]	6	17.37 [.684]	7	~~146128–5~~
OBSOLETE	2	12.70 [.500]	5	14.83 [.584]	6	~~146128–4~~
OBSOLETE	2	10.16 [.400]	4	12.29 [.484]	5	~~146128–3~~
OBSOLETE	2	7.62 [.300]	3	9.75 [.384]	4	~~146128–2~~
OBSOLETE	2	5.08 [.200]	2	7.21 [.284]	3	~~146128–1~~
	PLATING	C	B	A	NO OF POSN	PART NUMBER

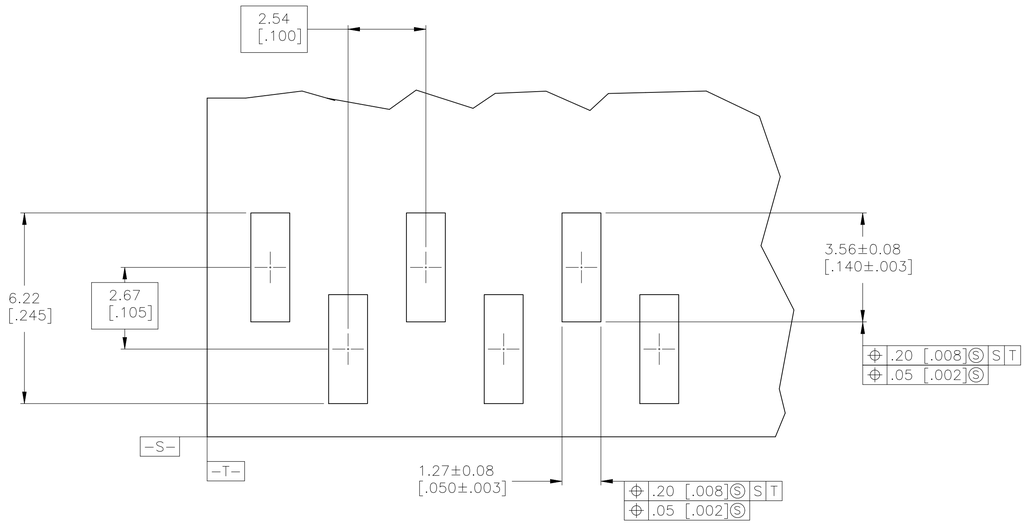

RECOMMENDED PCB LAYOUT
FOR USE WITH .008 THICK STENCIL

THIS DRAWING IS A CONTROLLED DOCUMENT.

DIMENSIONS: mm [INCHES]

TOLERANCES UNLESS OTHERWISE SPECIFIED:
0 PLC ± –
1 PLC ± –
2 PLC ± –
3 PLC ± .127[.005]
4 PLC ± –
ANGLES ± –

MATERIAL 3
FINISH SEE TABLE

DWN J. KNAUB 30-09-94
CHK G. DUBNICZKI 30-09-94
APVD G. DUBNICZKI 30-09-94
PRODUCT SPEC —
APPLICATION SPEC —
WEIGHT —

TE Connectivity

NAME SURFACE MOUNT HEADER ASSY, MOD II, B/A, VERT, SR, .100 X.100 C/L .025 SQ.POST

SIZE	CAGE CODE	DRAWING NO	RESTRICTED TO
A1	00779	C-146128	—

CUSTOMER DRAWING | SCALE 10:1 | SHEET 1 OF 1 | REV L1

4805 (1/15)