© – TE Connectivity. All Rights Reserved.

REVISIONS					
P	LTR	DESCRIPTION	DATE	DWN	APVD
	N1	REVISED PER ECN-22-164705	15JUL2022	RK	MF

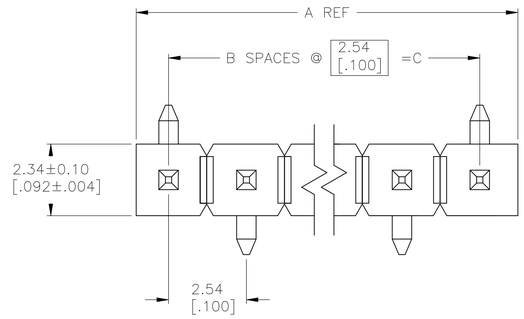

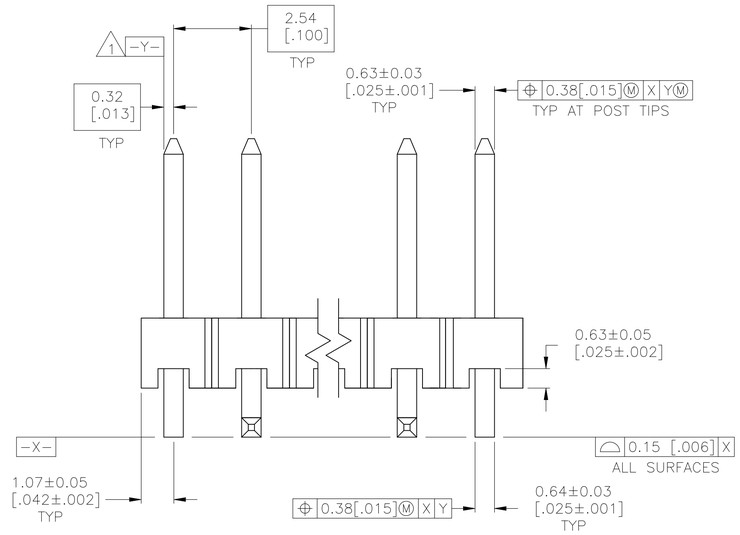

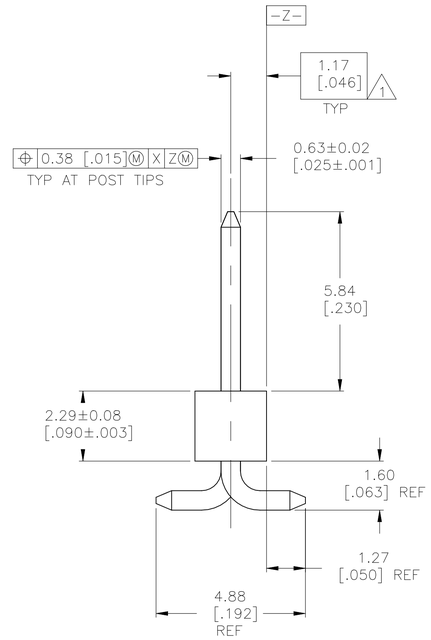

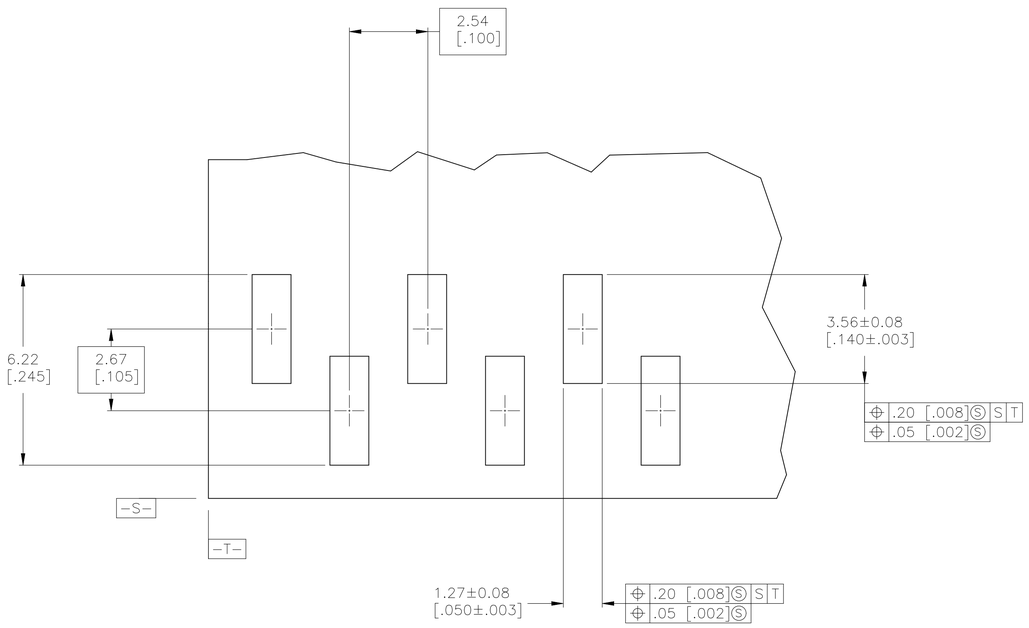

RECOMMENDED PCB LAYOUT
FOR USE WITH .008 THICK STENCIL

1. THE NOTED DIMENSIONS APPLY AT THE INTERSECTION OF THE POST AND THE HOUSING
2. 0.00254[.000100]–0.00508[.000200] MATTE TIN–LEAD OVER 0.00127[.000050] NICKEL ENTIRE POST
3. HOUSING: LCP, COLOR–BLACK
   POSTS: COPPER ALLOY
4. 0.00254[.000100]–0.00508[.000200] BRIGHT TIN OVER 0.00127[.000050] NICKEL ENTIRE POST.
5. PRELIMINARY PART – NOT RELEASED FOR PRODUCTION.
6. 0.00254[.000100]–0.00508[.000200] MATTE TIN OVER 0.00127[.000050] NICKEL ENTIRE POST
7. OBSOLETE PARTS: OBSOLETE CIS STREAMLINING PER D.RENAUD/D.SINISI

	PLATING	C	B	A	NO. OF POSN.	PART NUMBER
	6	35.56 [1.400]	14	37.69 [1.484]	15	6–146132–3
	6	33.02 [1.300]	13	35.15 [1.384]	14	6–146132–2
	6	30.48 [1.200]	12	32.61 [1.284]	13	6–146132–1
	6	27.94 [1.100]	11	30.07 [1.184]	12	6–146132–0
	6	25.40 [1.000]	10	27.53 [1.084]	11	5–146132–9
	6	22.86 [.900]	9	24.99 [.984]	10	5–146132–8
	6	20.32 [.800]	8	22.45 [.884]	9	5–146132–7
	6	17.78 [.700]	7	19.91 [.784]	8	5–146132–6
	6	15.24 [.600]	6	17.37 [.684]	7	5–146132–5
	6	12.70 [.500]	5	14.83 [.584]	6	5–146132–4
	6	10.16 [.400]	4	12.29 [.484]	5	5–146132–3
	6	7.62 [.300]	3	9.75 [.384]	4	5–146132–2
	6	5.08 [.200]	2	7.21 [.284]	3	5–146132–1
OBSOLETE	4	15.24 [.600]	6	17.37 [.684]	7	1–146132–5
OBSOLETE	2	35.56 [1.400]	14	37.69 [1.484]	15	1–146132–3
OBSOLETE 7	2	33.02 [1.300]	13	35.15 [1.384]	14	1–146132–2
	2	30.48 [1.200]	12	32.61 [1.284]	13	1–146132–1
OBSOLETE	2	27.94 [1.100]	11	30.07 [1.184]	12	1–146132–0
7 OBSOLETE	2	25.40 [1.000]	10	27.53 [1.084]	11	146132–9
OBSOLETE	2	22.86 [.900]	9	24.99 [.984]	10	146132–8
OBSOLETE	2	20.32 [.800]	8	22.45 [.884]	9	146132–7
OBSOLETE	2	17.78 [.700]	7	19.91 [.784]	8	146132–6
OBSOLETE	2	15.24 [.600]	6	17.37 [.684]	7	146132–5
OBSOLETE	2	12.70 [.500]	5	14.83 [.584]	6	146132–4
7 SUPERSEDED BY 5–146132–3	2	10.16 [.400]	4	12.29 [.484]	5	146132–3
OBSOLETE	2	7.62 [.300]	3	9.75 [.384]	4	146132–2
OBSOLETE	2	5.08 [.200]	2	7.21 [.284]	3	146132–1

THIS DRAWING IS A CONTROLLED DOCUMENT.

DIMENSIONS: mm [INCHES]

TOLERANCES UNLESS OTHERWISE SPECIFIED:
0 PLC ± –
1 PLC ± –
2 PLC ± –
3 PLC ± –
4 PLC ± –
ANGLES ± 0° 30'

MATERIAL 3

FINISH SEE TABLE

DWN J. KNOUB 09SEP94
CHK G. DUBNICZKI 09SEP94
APVD G. DUBNICZKI 09SEP94

PRODUCT SPEC –
APPLICATION SPEC –
WEIGHT –

TE Connectivity

NAME SURFACE MOUNT HEADER ASSY, MOD II, B/A, VERT, SINGLE ROW, .100 C/L .025 SQ. POST –

SIZE A1 | CAGE CODE 00779 | DRAWING NO C–146132 | RESTRICTED TO –

CUSTOMER DRAWING | SCALE 10:1 | SHEET 1 OF 1 | REV N1