SIGN	DATE	DESCRIPTION	APPROVER
1	08/04'10	Clamp is chnged	Aaron
2	01/19'10	Add is cULus	Aaron
3	04/02'11	Add is spec.	Runner
THIS IS CAD DRAWING, DO NOT REVISE MANUALLY!!!			

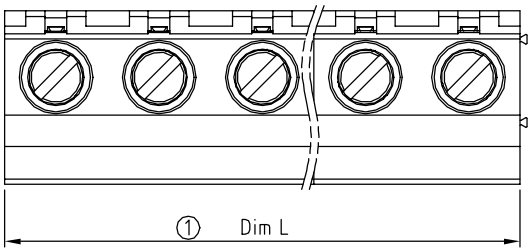

DIMENSION

Dim L	N×9.52
Dim A	(N-1)×9.52

N=Number of contacts

Poles	Tolerance
2p-6p	±0.15
7p-12p	±0.25
13p-16p	±0.35

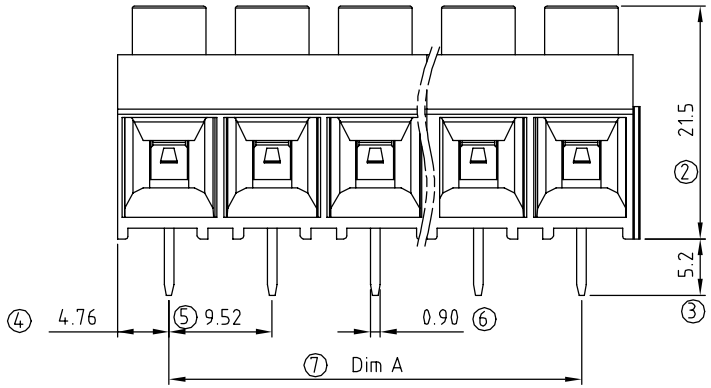

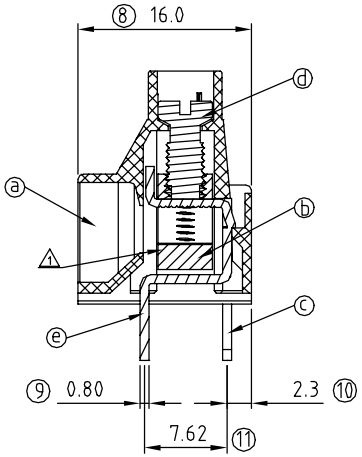

Material:

- Item ⓐ Terminal housing : Thermoplastic (UL94V-0)
- Item ⓑ Clamp : Brass, Ni plated
- Item ⓒ Wire guard solder pin : Copper , Tin plated (Side Contacts)
- Item ⓓ Terminal screw: Steel Zinc plating "-" slot type
- Item ⓔ Wire guard solder pin : Copper , Tin plated (Center Contacts)

Electrical:

- Voltage rating: 600 V
- Current rating: 30 A
- Wire range:
- Solid wire(AWG): 10-24
- Stranded wire(AWG): 10-24
- Torque: 5.5 Lb-In
- Screw: M3.5
- Wire strip length: 7-8 mm
- Withstanding Voltage: 2.2KV
- Operating temperature: -40°C to +115°C
- Soldering temperature: 250°C±10°C/5 Sec
- 2 Safety Approval: c UL us

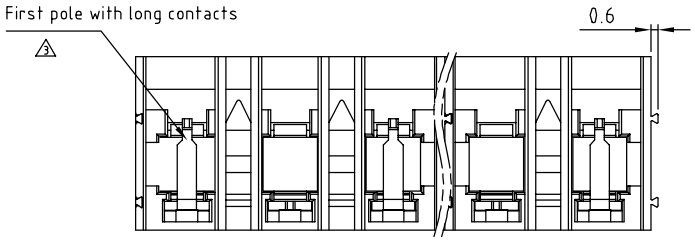

KO xx 21 x 1 xxxx G

No. of poles end stackable design

02	2 CONTACTS
03	3 CONTACTS
...	...
16	16 CONTACTS

0	Black (RAL9005)
2	Red (RAL3001/D)
3	Orange(RAL2011/P)
4	Yellow(RAL1018/A)
5	Green(RAL6018/T)
6	Blue (RAL5015/A)
8	Grey(RAL7035/D)

0000 Standard @ Logo
000A Standard ANY Logo
Any special item by customer request, please contact sales department.

RoHS
Pb<40,000ppm

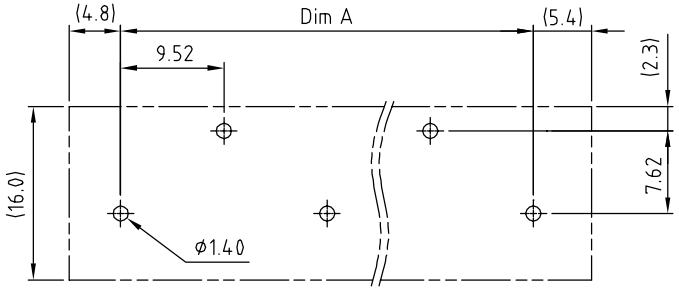

P.C.B. LAYOUT

ANYTEK

CUSTOMER COPY

ALL RIGHTS RESERVED. REPRODUCTION OR ISSUE TO THIRD PARTIES IN ANY FORM WHATEVER IS NOT PERMITTED WITHOUT WRITTEN AUTHORITY FROM THE PROPRIETOR. PROPERTY OF ANYTEK TECHNOLOGY CO., LTD

TITLE	KO 9.52 Series 2P-16P (Double row Pin)				
PART NO.	KOxx21x1xxxxG			DWG NO.	8KO0001
APPROVED	CHECKED	DESIGNED	DRAWN	CUST NO.	
		Runner 2011.04.02	Aaron 2009.10.20	UNIT: mm / SCALE: NONE / SHEET: 01/01 / REV.: E	

Tolerance	
X.	±0.50
X.X	±0.30
X.XX	±0.10
X°	±1°