| PART NUMBER | PHONO PLUG FINISH | HANDLE & HOUSING FINISH |
|---|---|---|
| 3502RA | NICKEL PLATED | NICKEL PLATED |
| 3502RAAU | GOLD PLATED | NICKEL PLATED |
| 3502RABAU | GOLD PLATED | BLACK CHROME |

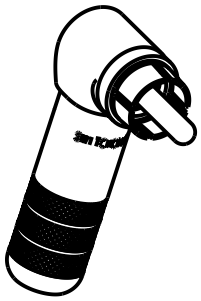

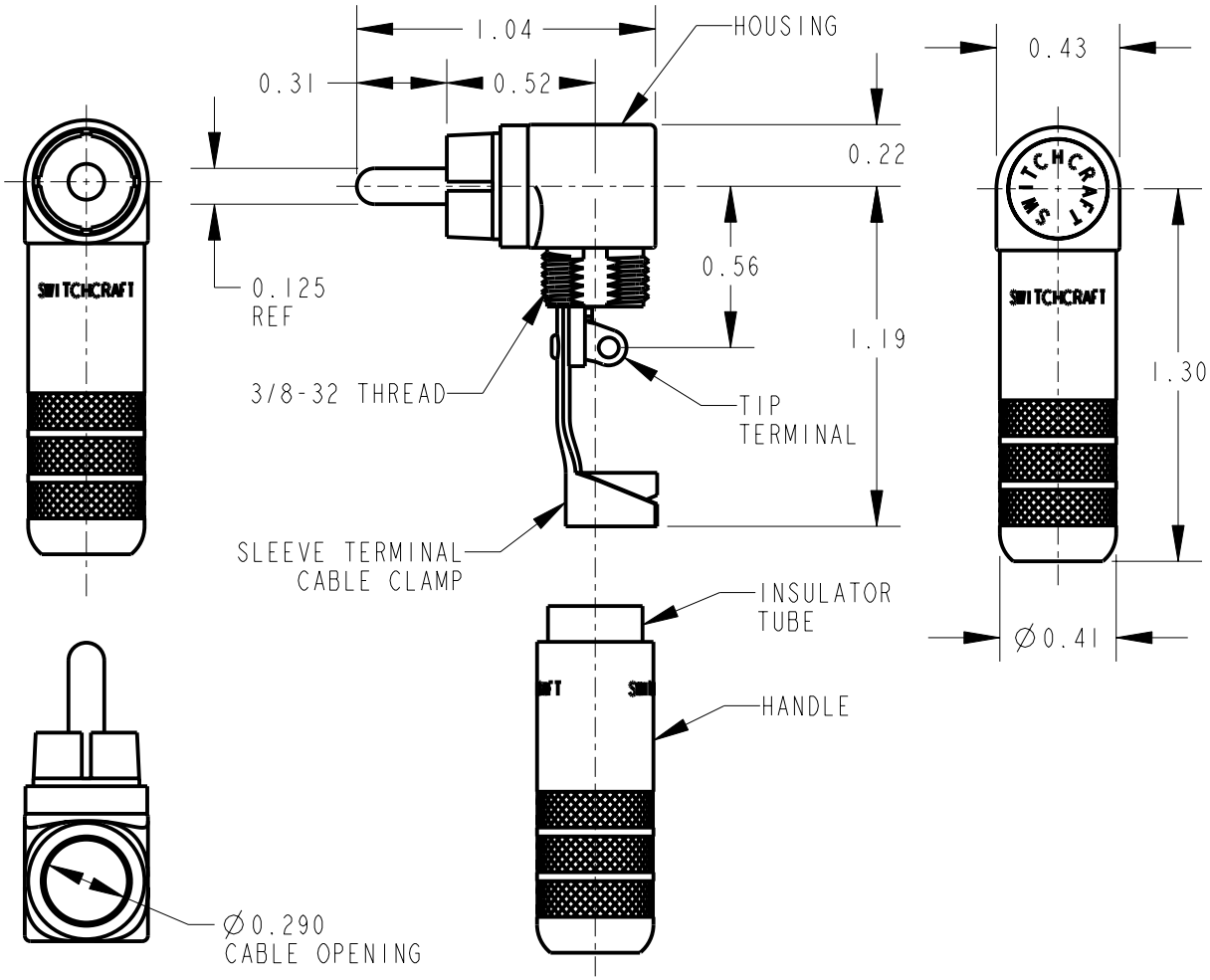


NOTES:

1. HANDLE AND INSULATOR SHIPPED UNASSEMBLED.

2. MATERIALS:
   HOUSING - ZINC ALLOY, SEE TABLE FOR FINISH
   PHONO PLUG - BRASS, SEE TABLE FOR FINISH
   PHONO PLUG INSULATOR - PHENOLIC
   SLEEVE TERMINAL - CRS, TIN PLATED
   TIP TERMINAL - BRASS, TIN PLATED
   TERMINAL INSULATOR - THERMOPLASTIC, BLACK
   HOUSING END CAP - BRASS, NICKEL PLATED
   GOLD PLATED ON P/N 3502RABAU
   INSULATOR TUBE - MYLAR
   HANDLE - BRASS, SEE TABLE FOR FINISH

3. THIS PRODUCT IS RoHS COMPLIANT.

CUSTOMER DRAWING

| REV | ECO NUMBER | DATE | BY | APVD |
|---|---|---|---|---|
| B | 24344 | 11-24-09 | TJK | TJK |

REVISIONS

☆ STAR SYMBOL DENOTES CRITICAL DIMENSION

UNLESS OTHERWISE SPECIFIED

1. ALL DIMENSIONS IN INCHES
   -TWO PLACE DECIMALS ±0.01
   -THREE PLACE DECIMALS ±0.005
   -ANGLES ±1°
   -ALL DIA. CONCENTRIC WITHIN 0.005 T.I.R.
2. FEATURES ON THE SAME CENTERLINE MUST BE ALIGNED WITHIN ±0.002
3. REMOVE ALL BURRS

DO NOT SCALE DRAWING

THIS DRAWING DESCRIBES A DESIGN CONSIDERED PROPRIETARY IN NATURE, DEVELOPED AND MANUFACTURED BY SWITCHCRAFT INC. AND IS RELEASED ON A CONFIDENTIAL BASIS FOR IDENTIFICATION PURPOSES ONLY.

| SIZE | WIDTH | MULT | LBS/M | TEMPER |
|---|---|---|---|---|
| | | | | |

FINISH
SPEC No.

MATERIAL
SPEC No.

FIRST USED ON

SCALE 3:2

| DATE DRAWN | BY | CHKD | APVD |
|---|---|---|---|
| 24-Nov-09 | TJK | TJK 11-24-09 | TJK 11-24-09 |

Switchcraft®

SHEET 1 OF 1

NAME: RIGHT ANGLE PHONO PLUG, RoHS

PART No.: 3502RA SERIES

REV: B

Pro/Engineer CAD File

A