NO.	YAZAKI PART NO. AND CH. CODE	MATERIAL	COLOR	MATING PART NO. AND CH. CODE
①	7122-4123-30	PA66	BLACK	7123-4123-30
②②	7122-4125-50	PA66	RED	7123-4125-50
②③	7122-4127-40	PA66	GRAY	③ ――――
②④	7122-4129-90	PA66	BLUE	7123-4129-90

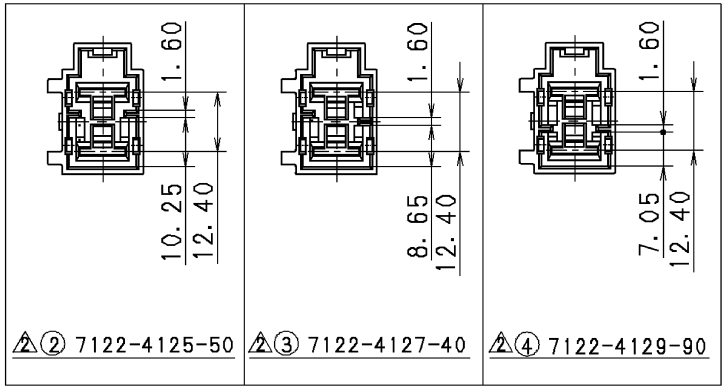

②② 7122-4125-50　②③ 7122-4127-40　②④ 7122-4129-90

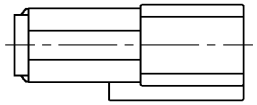

注記

1. 適用ターミナル品番 ： 7114-3250 ETC.
② 2. 適用リヤホルダ品番 ： 7157-6420-80

NOTES

1. APPLICABLE TERMINAL NO. :7114-3250 ETC.
② 2. APPLICABLE REAR HOLDER NO. : 7157-6420-80

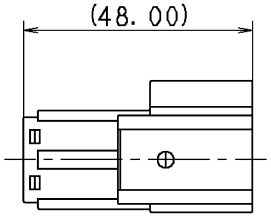

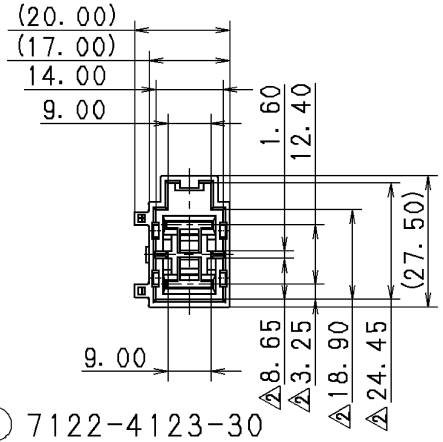

① 7122-4123-30

LET	DATE	REVISION RECORD	NO.	CHKD
④	11. 01. 14	CHANGED PART NAME	C11-ZA30	C. S
③	03. 05. 28	CORRECTION OF A CLERICAL ERROR	C03-X344	K. U
②	92. 11. 25	CHANGED FORM & ADDED PART NO.	C92-M049	M. M
①	92. 08. 28	RENEW	C92-6710	A. H

GENERAL TOLERANCE

	10MAX	50MAX	100MAX	250MAX	2500VR	ANGLE	ECCENT
A	±0. 15	±0. 2	±0. 3	±0. 5	±0. 75	±30′	0. 1
B	±0. 2	±0. 3	±0. 55	±0. 95	±1. 4	±30′	0. 1
Ⓒ	±0. 3	±0. 5	±0. 8	±1. 4	±2	±30′	0. 15

SPECIFIED　MASS

CUSTOMER
CUSTOMER PART NO.　CUSTOMER DWG NO.
OFFICE　TRIAL PART NO.
VENDOR
VENDOR NO.

DWG TYPE	DWG SOURCE	DWG DATE	UNIT	SCL	ANGLE
R	NEW	88. 03. 17	mm	1:1	3

APPROVED	CHECKED	CHECKED	DESIGN	DRAWN
S. MIZUSE	――――	R. DE GUZMAN	H. SAKAI	C. SANJOAQUIN
11. 01. 14	――――	11. 01. 14	88. 03. 17	11. 01. 14

MATL. SPEC. SEE TABLE　TREAT. & FIN.

NAME ④L TYPE HOUSING 2PM

PART NO. CH. CODE ②7122-4123-30 ETC.

DWG NO. 7122-4123-30:R　SET DWG NO.

YAZAKI CORPORATION

ISSUE MARK