© – TE Connectivity. All Rights Reserved.

REVISIONS					
P	LTR	DESCRIPTION	DATE	DWN	APVD
	W1	ECN–22–177079	29SEP2022	RK	MF

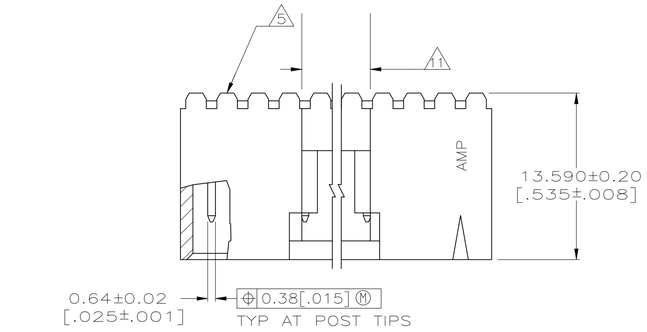

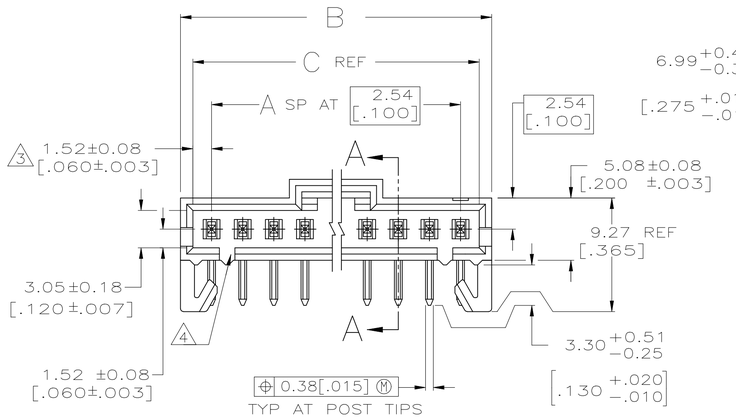

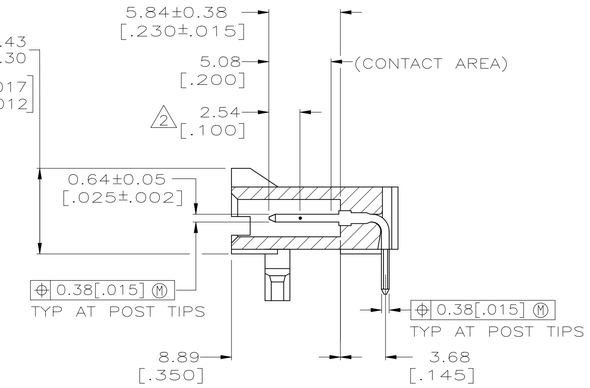

SECTION A–A

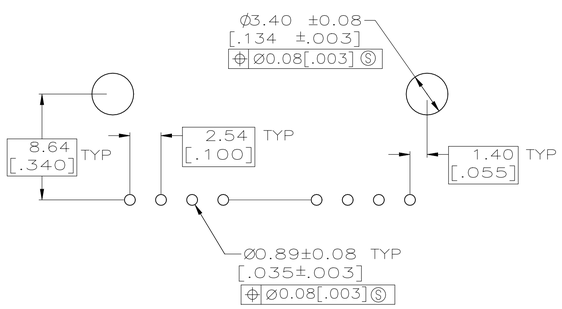

RECOMMENDED HOLE LAYOUT

1. .00038[.000015] GOLD IN THE CONTACT AREA, .00254[.000100] MATTE TIN–LEAD ON REMAINDER OF CONTACT, ALL OVER .00127[.000050] NICKEL.
2. POINT OF MEASUREMENT FOR PLATING THICKNESS.
3. THE NOTED DIMENSIONS APPLY AT THE INTERSECTION OF THE POST AND THE HOUSING.
4. ON ASSEMBLIES WITH FOUR OR MORE POSITIONS, TWO POLARIZATION SLOTS. ON ASSEMBLIES WITH TWO OR THREE POSITIONS, ONE POLARIZATION SLOT.
5. AMP TRADEMARK MOLDED ON THIS SURFACE.
6. FOR USE WITH 1.57±0.20[.062±.008] PRINTED CIRCUIT BOARD.
7. .00038[.000015] GOLD IN THE CONTACT AREA, .00254[.000100] MATTE TIN ON REMAINDER OF CONTACT, ALL OVER .00127[.000050] NICKEL.
8. PRELIMINARY PART – NOT RELEASED FOR PRODUCTION.
9. HIGH TEMPERATURE CONFIGURATION.
10. OBSOLETE PARTS: OBSOLETE CIS STREAMLINING PER D.RENAUD/D.SINISI
11. 0.25 [.010] RECESS PERMISSIBLE IN THIS AREA FOR MOLD SHUT OFF

SEE SHEET 2 FOR PART NUMBER TABLES

THIS DRAWING IS A CONTROLLED DOCUMENT.

DIMENSIONS: mm [INCHES]

TOLERANCES UNLESS OTHERWISE SPECIFIED:
0 PLC ± –
1 PLC ± –
2 PLC ± 0.13[.005]
3 PLC ± –
4 PLC ± –
ANGLES ± –

MATERIAL: HOUSING: FLAME RETARDENT LCP,COLOR BLACK. CONTACTS: BRASS
FINISH: SEE TABLE

DWN S. SHUEY 05MAR91
CHK J. GESFORD 05MAR91
APVD J. GESFORD 05MAR91
PRODUCT SPEC 108–25034
APPLICATION SPEC 114–25026
WEIGHT –

TE Connectivity Ltd.

NAME: HDR ASSY, RTANG, SR 2.54[.100] C/L 0.641[.025] SQ. POST, WITH PLZN & HOLD DOWNS

SIZE A1 | CAGE CODE 00779 | DRAWING NO C–103673 | RESTRICTED TO –

CUSTOMER DRAWING | SCALE 4:1 | SHEET 1 OF 2 | REV W1

4805 (1/15)

© – TE Connectivity. All Rights Reserved.

REVISIONS					
P	LTR	DESCRIPTION	DATE	DWN	APVD
	–	SEE SHEET 1	–	–	–

9	7	64.01 [2.520]	65.91 [2.595]	24	25	7-103673-4	OBSOLETE 10
9	7	61.47 [2.420]	63.37 [2.495]	23	24	7-103673-3	
9	7	58.93 [2.320]	60.83 [2.395]	22	23	7-103673-2	OBSOLETE 10
9	7	56.39 [2.220]	58.29 [2.295]	21	22	7-103673-1	OBSOLETE 10
9	7	53.85 [2.120]	55.75 [2.195]	20	21	7-103673-0	OBSOLETE 10
9	7	51.31 [2.020]	53.21 [2.095]	19	20	6-103673-9	
9	7	48.77 [1.920]	50.67 [1.995]	18	19	6-103673-8	OBSOLETE 10
9	7	46.23 [1.820]	48.13 [1.895]	17	18	6-103673-7	OBSOLETE 10
9	7	43.69 [1.720]	45.59 [1.795]	16	17	6-103673-6	
9	7	41.15 [1.620]	43.05 [1.695]	15	16	6-103673-5	
9	7	38.61 [1.520]	40.51 [1.595]	14	15	6-103673-4	
9	7	36.07 [1.420]	37.97 [1.495]	13	14	6-103673-3	
9	7	33.53 [1.320]	35.43 [1.395]	12	13	6-103673-2	OBSOLETE 10
9	7	30.99 [1.220]	32.89 [1.295]	11	12	6-103673-1	
9	7	28.45 [1.120]	30.35 [1.195]	10	11	6-103673-0	
9	7	25.91 [1.020]	27.81 [1.095]	9	10	5-103673-9	
9	7	23.37 [.920]	25.27 [0.995]	8	9	5-103673-8	
9	7	20.83 [.820]	22.73 [.895]	7	8	5-103673-7	
9	7	18.29 [.720]	20.19 [.795]	6	7	5-103673-6	
9	7	15.75 [.620]	17.65 [.695]	5	6	5-103673-5	
9	7	13.21 [.520]	15.11 [.595]	4	5	5-103673-4	
9	7	10.67 [.420]	12.57 [.495]	3	4	5-103673-3	
9	7	8.13 [.320]	10.03 [.395]	2	3	5-103673-2	
9	7	5.59 [.220]	7.49 [.295]	1	2	5-103673-1	
REMARKS	PLATING	C	B	A	NO. OF POSN	PART NO.	

8	7	41.15 [1.620]	43.05 [1.695]	15	16	2-103673-6	
8	7	18.29 [.720]	20.19 [.795]	6	7	2-103673-5	
9	1	64.01 [2.520]	65.91 [2.595]	24	25	2-103673-4	
9	1	61.47 [2.420]	63.37 [2.495]	23	24	2-103673-3	
9	1	58.93 [2.320]	60.83 [2.395]	22	23	2-103673-2	OBSOLETE 10
9	1	56.39 [2.220]	58.29 [2.295]	21	22	2-103673-1	
9	1	53.85 [2.120]	55.75 [2.195]	20	21	2-103673-0	OBSOLETE 10
9	1	51.31 [2.020]	53.21 [2.095]	19	20	1-103673-9	
9	1	48.77 [1.920]	50.67 [1.995]	18	19	1-103673-8	OBSOLETE 10
9	1	46.23 [1.820]	48.13 [1.895]	17	18	1-103673-7	
9	1	43.69 [1.720]	45.59 [1.795]	16	17	1-103673-6	
9	1	41.15 [1.620]	43.05 [1.695]	15	16	1-103673-5	
9	1	38.61 [1.520]	40.51 [1.595]	14	15	1-103673-4	
9	1	36.07 [1.420]	37.97 [1.495]	13	14	1-103673-3	
9	1	33.53 [1.320]	35.43 [1.395]	12	13	1-103673-2	OBSOLETE 10
9	1	30.99 [1.220]	32.89 [1.295]	11	12	1-103673-1	
9	1	28.45 [1.120]	30.35 [1.195]	10	11	1-103673-0	
9	1	25.91 [1.020]	27.81 [1.095]	9	10	103673-9	
9	1	23.37 [.920]	25.27 [0.995]	8	9	103673-8	
9	1	20.83 [.820]	22.73 [.895]	7	8	103673-7	
9	1	18.29 [.720]	20.19 [.795]	6	7	103673-6	
9	1	15.75 [.620]	17.65 [.695]	5	6	103673-5	
9	1	13.21 [.520]	15.11 [.595]	4	5	103673-4	
9	1	10.67 [.420]	12.57 [.495]	3	4	103673-3	
9	1	8.13 [.320]	10.03 [.395]	2	3	103673-2	
9	1	5.59 [.220]	7.49 [.295]	1	2	103673-1	
REMARKS	PLATING	C	B	A	NO. OF POSN	PART NO.	

THIS DRAWING IS A CONTROLLED DOCUMENT.

DIMENSIONS: mm [INCHES]

TOLERANCES UNLESS OTHERWISE SPECIFIED:
0 PLC ± –
1 PLC ± –
2 PLC ± 0.13[.005]
3 PLC ± –
4 PLC ± –
ANGLES ± –

MATERIAL
HOUSING: FLAME RETARDENT LCP,COLOR BLACK.
CONTACTS: BRASS

FINISH
SEE TABLE

DWN S. SHUEY 05MAR91
CHK J. GESFORD 05MAR91
APVD J. GESFORD 05MAR91

PRODUCT SPEC 108-25034
APPLICATION SPEC 114-25026
WEIGHT

TE Connectivity Ltd.

NAME
HDR ASSY, RTANG, SINGLE ROW
2.54[.100] C/L 0.641[.025] SQ. POST,
WITH PLZN & HOLD DOWNS, AMPMODU MTE

SIZE A1 | CAGE CODE 00779 | DRAWING NO C-103673 | RESTRICTED TO –

CUSTOMER DRAWING | SCALE 4:1 | SHEET 2 OF 2 | REV W1

4805 (1/15)