SIGN	DATE	DESCRIPTION	APPROVER
1	8/07'06	Added VDE standard	梁仁松
2	2010.11.29	The tolerance is changed	Jacke

THIS IS CAD DRAWING, DO NOT REVISE MANUALLY!!!

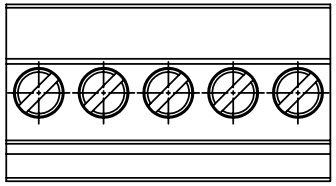

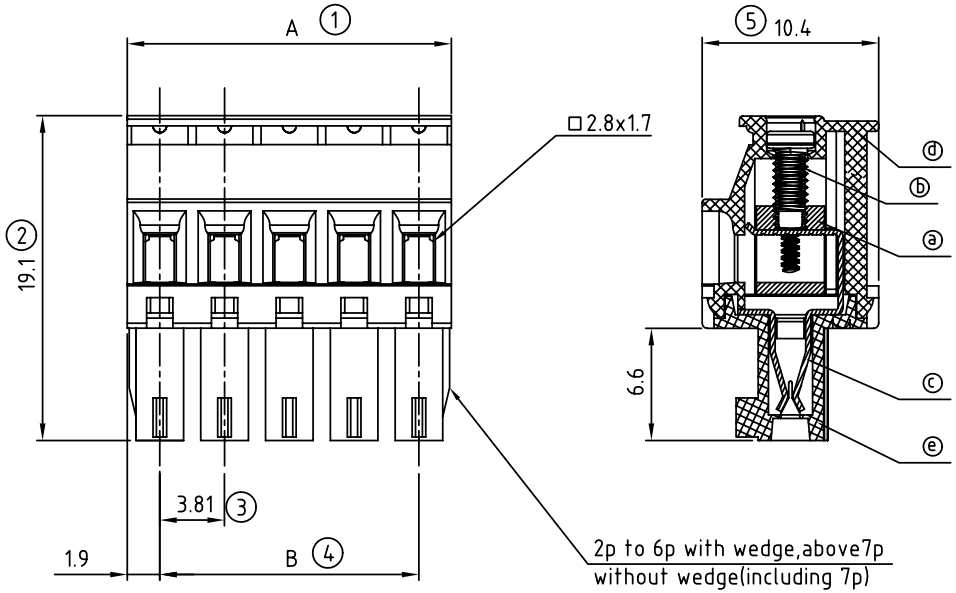

Material

- Item ⓐ Clamp: Brass(CuZn),Nickel plated
- Item ⓑ Terminal screw: Steel Zinc plating "-" slot type
- Item ⓒ Female contact: PhBz, Tin plated
- Item ⓓ Terminal (housing): Thermoplastic (UL94V-0)
- Item ⓔ Terminal (cover): Thermoplastic (UL94V-0)

1 Electrical cULus/VDE

- Voltage rating: 300VAC/300VAC
- Current rating: 8A/10A
- Wire range: 1.5mm²
- Solid wire(AWG): 16-28
- Stranded wire(AWG): 16-28
- Torque: 1.7Lb-In./0.2Nm
- Screw: M2
- Wire strip length: 6-7mm
- Withstanding Voltage: 1.6KV/2.5KV
- Operating temperature: -40°C to +115°C
- Safety approval: cULus VDE

TS xx 3 1 x A xxxx G

No. OF POLES
02: 2 POLES
:
:
24: 24 POLES

Color
0 Black (RAL9005)
2 Red (RAL3001/D)
3 Orange(RAL2011/P)
4 Yellow(RAL1018/A)
5 Green(RAL6018/T)
6 Blue (RAL5015/A)
8 Grey(RAL7035/D)

0000 Standard @ Logo
000A Standard ANY Logo
Any special item by customer request, please contact sales department.

RoHS pb<40 , 000ppm

DIMENSION
N = Number of contacts

A	NX3.81
B	(N-1)X3.81

2

Poles	Tolerance
2p-6p	±0.15
7p-12p	±0.20
13p-16p	±0.25
17p-24p	±0.30

ANYTEK

CUSTOMER COPY

ALL RIGHTS RESERVED. REPRODUCTION OR ISSUE TO THIRD PARTIES IN ANY FORM WHATEVER IS NOT PERMITTED WITHOUT WRITTEN AUTHORITY FROM THE PROPRIETOR. PROPERTY OF ANYTEK TECHNOLOGY CO., LTD

TITLE	TS-3.81mm Series Without flange (W/latching hooks on the wire entry side)				
PART NO.	TSxx31xAxxxxG			DWG NO.	8TS0301
APPROVED	CHECKED	DESIGNED	DRAWN	CUST NO.	
		Jacke 2010.11.29	Marvin 2006.08.07	UNIT: mm	
				SCALE: NONE	
				SHEET: 01/01	REV.: F

Tolerance	
X.	±0.50
X.X	±0.30
X.XX	±0.10
X°	±1°