SIGN	DATE	DESCRIPTION	APPROVER
1	09/20'10	Current rating is changed	Runner
2	05/11'11	The dimensions is Changed from 26.3 &14.5 to 26.5 &14.7	Chen Bo
3	08/22'12	Update the drawing	Da cheng
THIS IS CAD DRAWING, DO NOT REVISE MANUALLY!!!			

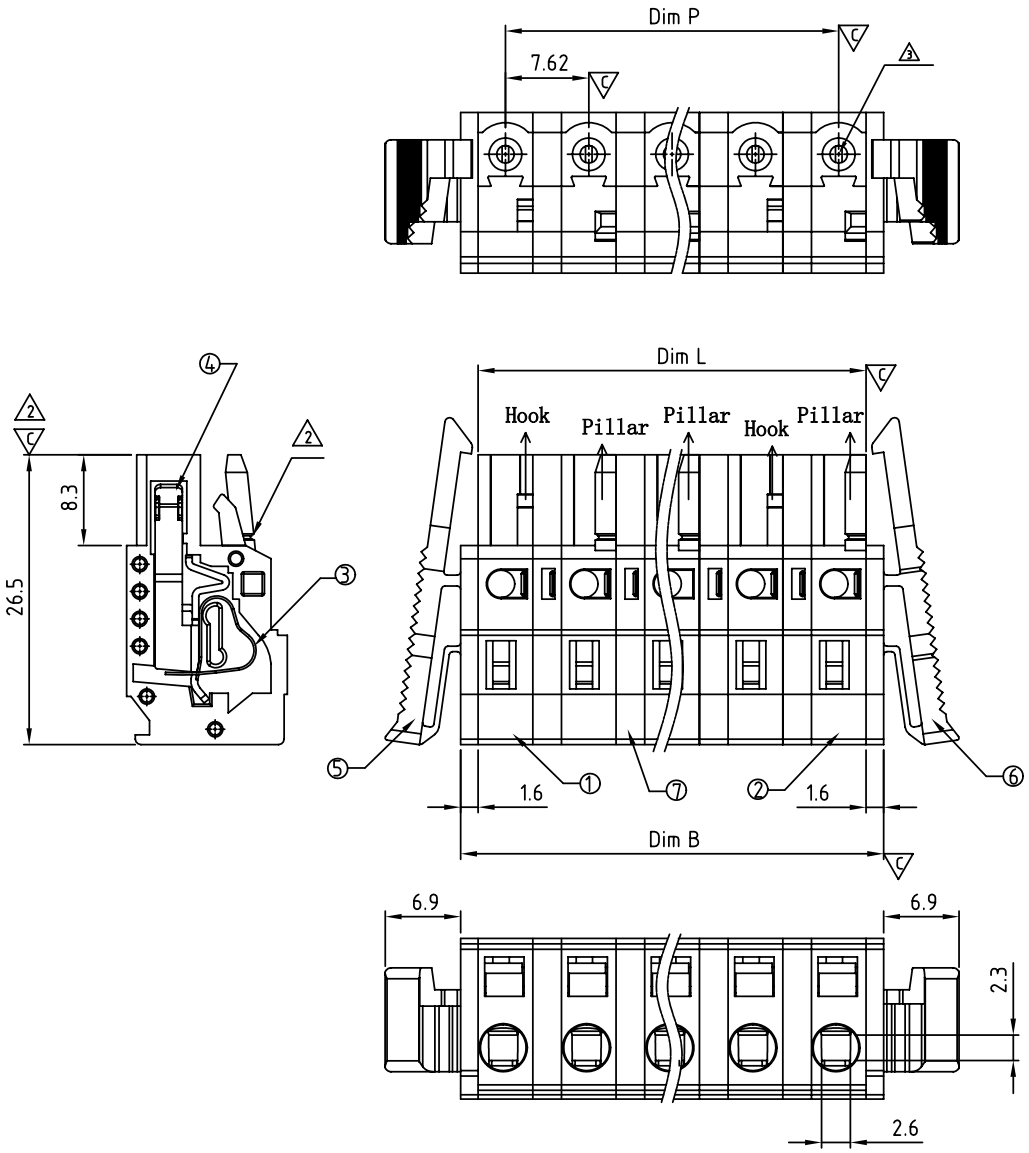

Material:
- Item ① Terminal housing (With hook) :Thermoplastic (UL94V-0)
- Item ② Terminal housing (With Pillar) :Thermoplastic (UL94V-0)
- Item ③ Spring Clamp: Stainless steel
- Item ④ Female contact: PhBz.Tin plated
- Item ⑤ Terminal(Left Latch): Thermoplastic (UL94V-0)
- Item ⑥ Terminal(Right Latch): Thermoplastic (UL94V-0)
- Item ⑦ Pad borad: Thermoplastic (UL94V-0)

Electrical:	cULus
Voltage rating:	300 V
Current rating:	8 A
Wire range:	
Solid wire(AWG):	12-28
Stranded wire(AWG):	12-28
Wire strip length:	8-9 mm
Withstanding Voltage:	1.6KV
Operating temperature:	-40°C to +115°C
Critical dimension:	C

HI xx 3 0 x 3 xxxx G

POLES
02: 2pole
''' '''
16: 16pole

COLOR
0: BLACK
5: GREEN
6: BLUE
8: GREY

RoHS compliant (lead<4%) 3
In copper Alloy

0000: "@" Logo (Standard)
(Steel screw plating Cr)
000A: "ANYTEK" Mark
Any special item by customer requst.
please contact sales department.

Layout of Hook and Pillar:

2P	Hook+Pillar
3P	Hook+Hook+Pillar
4P	Hook+Pillar+Hook+Pillar
5P	Hook+Pillar+Pillar+Hook+Pillar
5P over	Hook+Pillar+pillar...+Pillar+Hook+Pillar

DIM		TOL			
		2P-4P	5P-8P	9P-12P	13P-16P
Dim L	N×7.62-2.62	±0.15	±0.25	±0.30	±0.40
Dim P	(N-1)×7.62	±0.15	±0.25	±0.30	±0.40
Dim B	N×7.62+0.58	±0.15	±0.25	±0.30	±0.40

ANYTEK

CUSTOMER COPY

ALL RIGHTS RESERVED. REPRODUCTION OR ISSUE TO THIRD PARTIES IN ANY FORM WHATEVER IS NOT PERMITTED WITHOUT WRITTEN AUTHORITY FROM THE PROPRIETOR. PROPERTY OF ANYTEK TECHNOLOGY CO., LTD

TITLE	HI 7.62mm With latch Series				
PART NO.	HIxx30x3xxxxG			DWG NO.	8HI0203
APPROVED	CHECKED	DESIGNED	DRAWN	CUST NO.	
		Dacheng 2012.08.22	Dacheng 2012.08.22	UNIT: mm	
				SCALE: NONE	
				SHEET: 01/01	REV.: E

Tolerance	
X.	±0.50
X.X	±0.30
X.XX	±0.10
X°	±1°