SIGN	DATE	DESCRIPTION	APPROVER
1	12/01'08	Flange screw changed from "-" to "+/-"	Tony
2	2010.01.29	Add cULus standard	Jacke
3	2010.01.29	The wire strip length is changed	Jacke
4	2010.03.31	Add the 2p mark	Jacke

THIS IS CAD DRAWING, DO NOT REVISE MANUALLY!!!

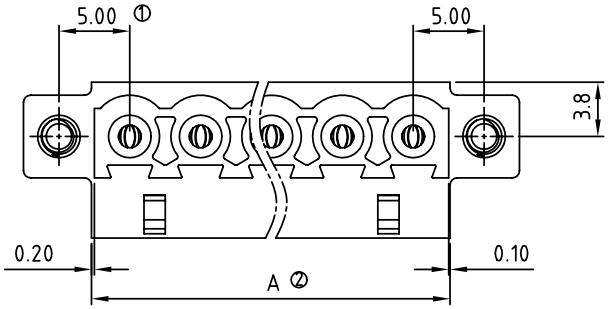

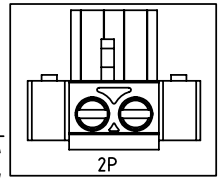

4

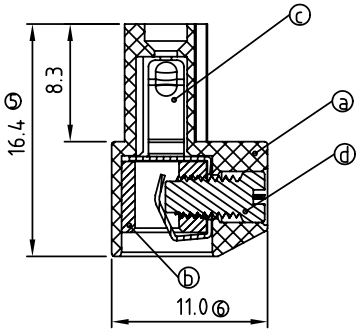

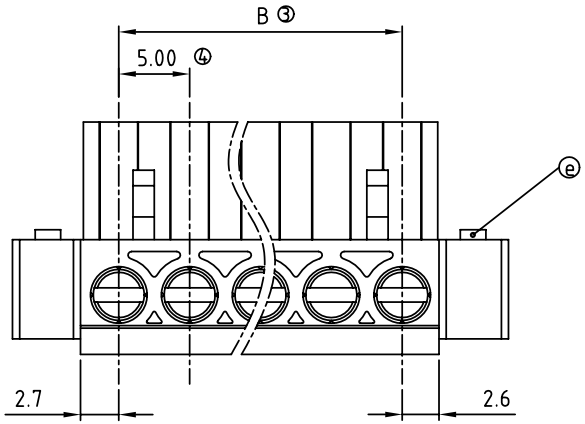

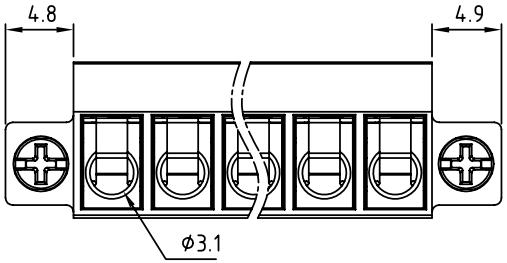

Material:

- Item ⓐ Terminal(housing): Thermoplastic (UL94V-0)
- Item ⓑ Clamp: Brass(CuZn) Ni plated
- Item ⓒ Female contact: PhBz Tin plated
- Item ⓓ Terminal Screw: Steel zinc plated. "-" solt type
- 1 Item ⓔ With flange screw: M2.5 Steel Zinc plated."+/-" solt type

Electrical: cULus

- Voltage rating: 300 V
- Current rating: 15 A
- Wire range:
- Solid wire(AWG):12-22
- Stranded wire(AWG):12-22
- Torque: 4.3 Lb-In
- Screw:M3
- 3 Wire strip length:7-8 mm
- Withstanding Voltage:1.6KV
- Operating temperature:-40°C to +115°C
- 2 Safety Approval: c UL us

E Z xx 7 1 x 2 xxxx G

No. OF POLES
02: 2 POLES
:
:
24: 24 POLES

COLOR
0 Black (RAL9005)
2 Red (RAL3001/D)
3 Orange(RAL2011/P)
4 Yellow(RAL1018/A)
5 Green(RAL6018/T)
6 Blue (RAL5015/A)
8 Grey(RAL7035/D)

G: Pb<40000ppm

0000: "@" Logo (Standard)
000A: "ANYTEK" Mark

Any special item by customer requst. please contact sales department.

POLE		2	3	4	5	6	7	8	9	10	11	12
A		10.30	15.30	20.30	25.30	30.30	35.30	40.30	45.30	50.30	55.30	60.30
B		5.00	10.00	15.00	20.00	25.00	30.00	35.00	40.00	45.00	50.00	55.00
Tol.		±0.15					±0.20					
POLE	13	14	15	16	17	18	19	20	21	22	23	24
A	65.30	70.30	75.30	80.30	85.30	90.30	95.30	100.30	105.30	110.30	115.30	120.30
B	60.00	65.00	70.00	75.00	80.00	85.00	90.00	95.00	100.00	105.00	110.00	115.00
Tol.		±0.25					±0.30					

ANYTEK

CUSTOMER COPY

ALL RIGHTS RESERVED. REPRODUCTION OR ISSUE TO THIRD PARTIES IN ANY FORM WHATEVER IS NOT PERMITTED WITHOUT WRITTEN AUTHORITY FROM THE PROPRIETOR. PROPERTY OF ANYTEK TECHNOLOGY CO., LTD

TITLE	EZ-5.0 W/Flange Series				
PART NO.	EZxx71x2xxxxG			DWG NO.	8EZ0002
APPROVED	CHECKED	DESIGNED	DRAWN	CUST NO.	
		Jacke 2010.03.31	Jacke 2010.01.29	UNIT: mm	
				SCALE: NONE	
				SHEET: 01/01	REV.: E

Tolerance	
X.	±0.50
X.X	±0.30
X.XX	±0.10
X°	±1°