| SIGN | DATE | DESCRIPTION | APPROVER |
|---|---|---|---|
| 1 | 04/23'08 | Part No. is changed. | Marvin |
| 2 | 08/25'09 | Poles is changed from 2p-24p to 4p-24p | Aaron |
| 3 | 09/14'09 | Add chamfer | Aaron |
| 4 | 09/22'11 | Structure changed | ChenMing |

*THIS IS CAD DRAWING, DO NOT REVISE MANUALLY!!!*

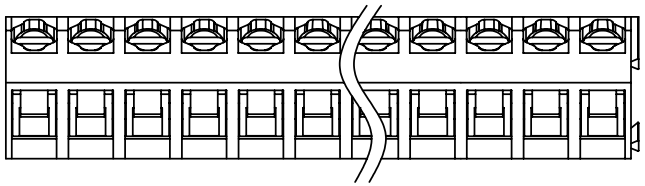

Dimension A&B

| | |
|---|---|
| DIM A | N×5.0 |
| DIM B | (N-1)×5.0 |

N=Number of contacts

| Poles | A&B Tolerance | ▱ C |
|---|---|---|
| 4P-8P | ±0.15 | 0.20 |
| 9P-14P | ±0.25 | 0.20 |
| 15P-20P | ±0.35 | 0.20 |
| 21P-24P | ±0.40 | 0.40 |

Material:

- Item① Clamp: Brass,Ni plated
- Item② Terminal screw: Steel Zinc plating "-" slot type.
- Item③ Wire guard solder pin: Brass, Tin plated
- Item④ Terminal housing: Thermoplastic (UL94V-0)

| Electrical: | cULus |
|---|---|
| Voltage rating: | 300V |
| Current rating: | 10A |
| Wire range: | |
| Solid wire(AWG): | 12-22 |
| Stranded wire(AWG): | 12-22 |
| Torque: | 3.5 Lb-In |
| Screw: | M2.5 |
| Wire strip length: | 6-7mm |
| Withstanding Voltage: | 1.6 KV |
| Operating temperature: | -40°C to +115°C |
| Soldering temperature: | 250°C±10°C/5 Sec |
| Safety Approval: | c UL us |
| Critical dimension: | ▽ |

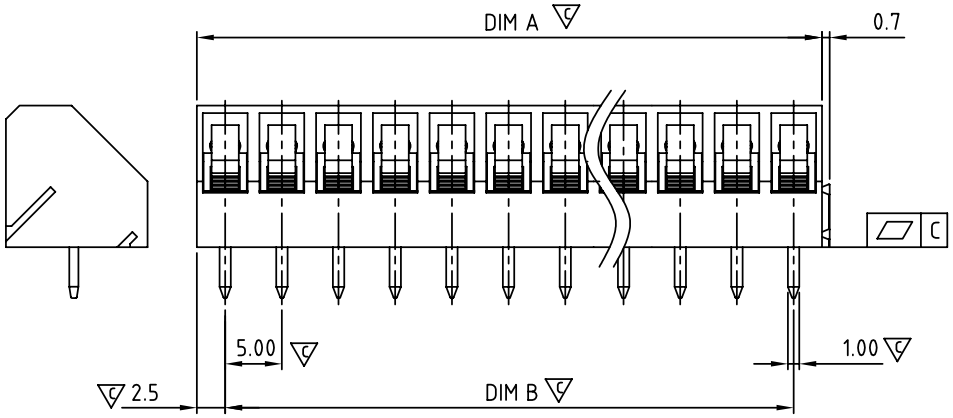


N= Number of contacts

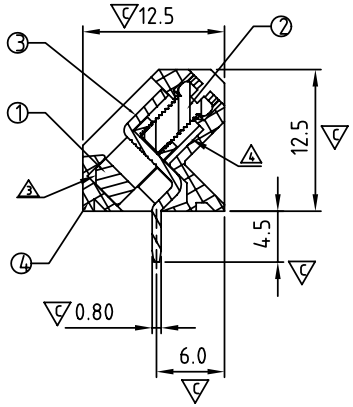


TG xx 0 1 x 0 C xxx G ③

G: Pb<40000ppm

| | | | |
|---|---|---|---|
| ② 04 | 4 POLES | 0: BLACK | 000 "@" Logo |
| 05 | 5 POLES | 5: GREEN | 00A "ANYTEK" Mark |
| | : | 6: BLUE | Any special item by customer requst. please contact sales department. |
| 24 | 24 POLES | 8: GREY | |

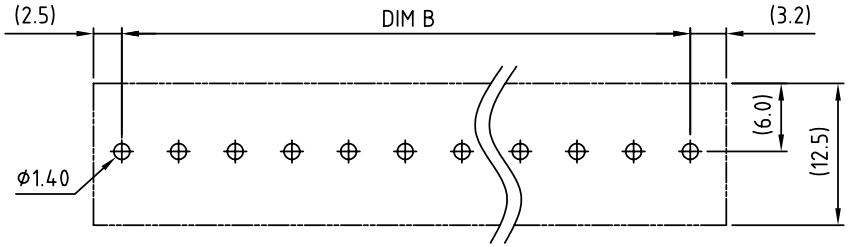


PCB LAYOUT

**ANYTEK**

**CUSTOMER COPY**

ALL RIGHTS RESERVED. REPRODUCTION OR ISSUE TO THIRD PARTIES IN ANY FORM WHATEVER IS NOT PERMITTED WITHOUT WRITTEN AUTHORITY FROM THE PROPRIETOR. PROPERTY OF ANYTEK TECHNOLOGY CO., LTD

| | | | | | |
|---|---|---|---|---|---|
| TITLE | TG 5.0mm Series Long Interlock solid block type 4p-24p ② | | | | |
| PART NO. | TGxx01x0CxxxG | | | DWG NO. | 8TG0104 |
| APPROVED | CHECKED | DESIGNED | DRAWN | CUST NO. | |
| | | | ChenMing 2011.09.22 | UNIT: mm | |
| | | | | SCALE: NONE | |
| | | | | SHEET: 01/01 | REV.: F |

| Tolerance | |
|---|---|
| X. | ±0.50 |
| X.X | ±0.30 |
| X.XX | ±0.10 |
| X° | ±1° |