SIGN	DATE	DESCRIPTION	APPROVER
1	2/07'06	Part No. changed	Tony
2	7/11'06	Dimesion changed from 3.6 to3.5	Tony
3	2006.08.3	Screw torque value changed from 10.4Lb-in to 12Lb-in	梁仁松
4	2006.08.3	Approval changed	梁仁松
5	3/30'09	Structure changed	JODY
6	3/30'09	Temperature changed from -40~105°C to -40~115°C	JODY
7	11/17'12	Change the screw plating specification	Jacky
8	11/17'12	Change the dimensional tolerance	Jacky
9	08/25'14	The dimensional tolerance is changed from17.4±0.30 to $17.4^{+0.80}_{-0.30}$	Airy min

THIS IS CAD DRAWING, DO NOT REVISE MANUALLY!!!

N=Number of poles

Dimension A&B&C

Dim A	(N+2)×10.0
Dim B	(N-1)×10.0
Dim C	N×10.0+3.5

Poles	Tolerance
4p-10p	±0.40
11p-20p	±0.60
21p-30p	±0.80

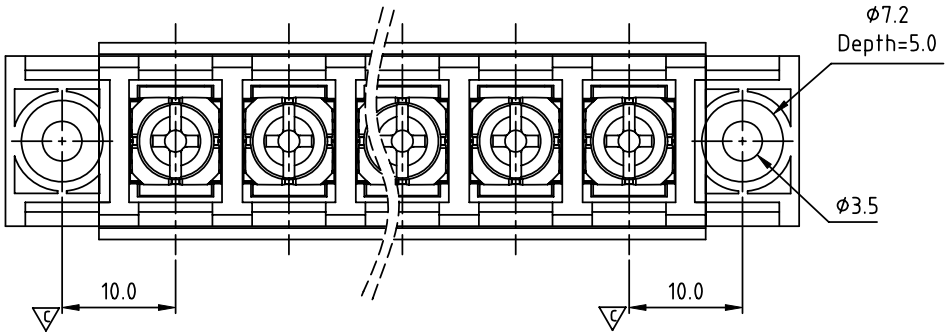

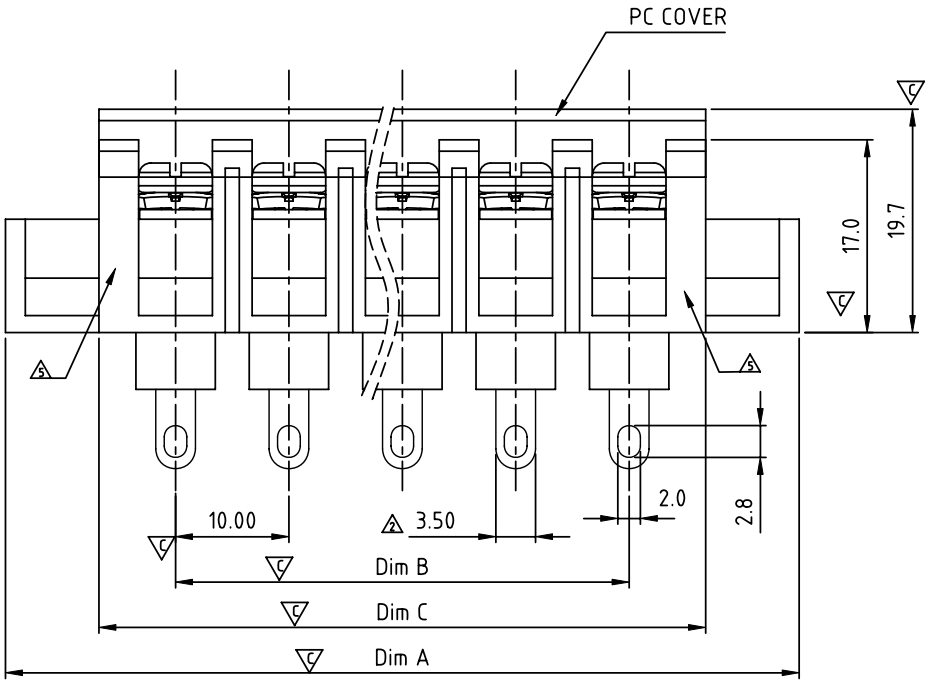

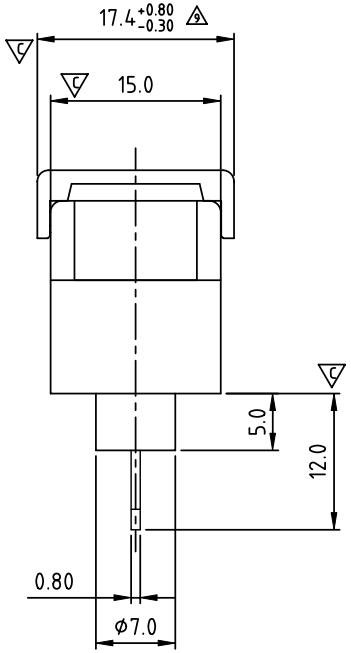

MATERIALS ELECTRICAL

RATED VOLTAGE & CURRENT:	300 V, 20 A
WITHSTAND VOLTAGE:	AC 2000 V/Min
INSULATION RESISTANCE:	1000 MΩ OR MORE AT DC 500 V
OPERATING TEMPERATURE RANG:	6 -40 °C ~ +115 °C
3 SCREW TORQUE VALUE:	12Lb-In.
WIRE RANGE:	22 - 12 AWG
1) MOLDED PARTS:	POLYMIDE 66, UL 94 V-0 BLACK
2) TERMINAL:	BRASS, 0.8t, Tin PLATED
1 3) TERMINAL SCREWS:	STEEL, M3.5
4) COVER MATERIAL:	PC
4 APPROVAL: c us	
1 PART NO.: Critical dimension: C	

YK 606 xx 1 x x 00G

NO. OF POLES
- 04: 4 POLES
- 05: 5 POLES
- 06: 6 POLES
- ⋮
- 30: 30 POLES

MARK
- 0: "@" MARK
- 1: "ANY" MARK

G:RoHS compliant(lead<4%) in copper alloy

TERMINAL & SCREW PLATED
- 0: TERMINAL & SCREW: G/F
- 1 1: TERMINAL: G/F, SCREW: Zinc
- 2: TERMINAL: Sn, SCREW: G/F
- 1 3: TERMINAL: Sn, SCREW: Zinc

ANYTEK

CUSTOMER COPY

ALL RIGHTS RESERVED. REPRODUCTION OR ISSUE TO THIRD PARTIES IN ANY FORM WHATEVER IS NOT PERMITTED WITHOUT WRITTEN AUTHORITY FROM THE PROPRIETOR. PROPERTY OF ANYTEK TECHNOLOGY CO., LTD

TITLE	YK-606 With Flange&With Cover Series(4P-30P)				
PART NO.	YK606xx1xx00G			DWG NO.	8YK0001-606
APPROVED	CHECKED	DESIGNED	DRAWN	CUST NO.	
		Airy min 2014.08.25	Airy min 2014.08.25	UNIT: mm / SCALE: NONE / SHEET: 01/01 / REV.: H	

Tolerance	
X.	±0.50
X.X	±0.30
X.XX	±0.10
X°	±1°