| SIGN | DATE | DESCRIPTION | APPROVER |
|---|---|---|---|
| ⚠1 | | | |
| THIS IS CAD DRAWING, DO NOT REVISE MANUALLY!!! | | | |

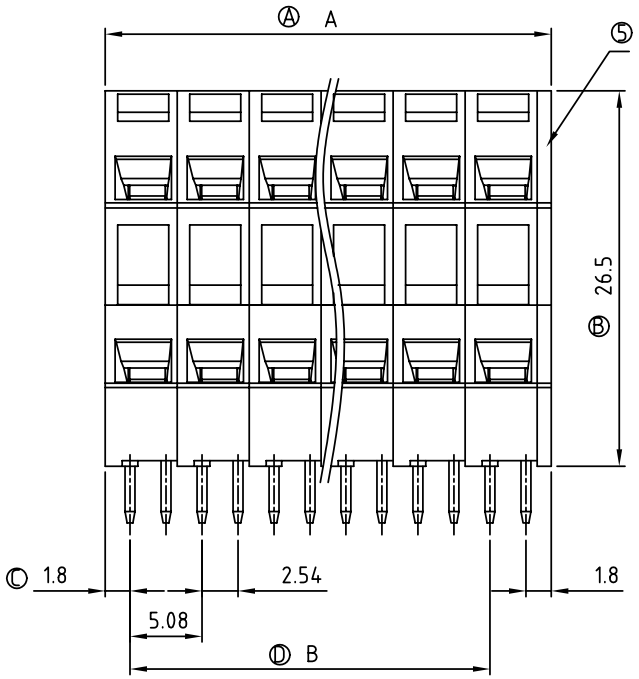


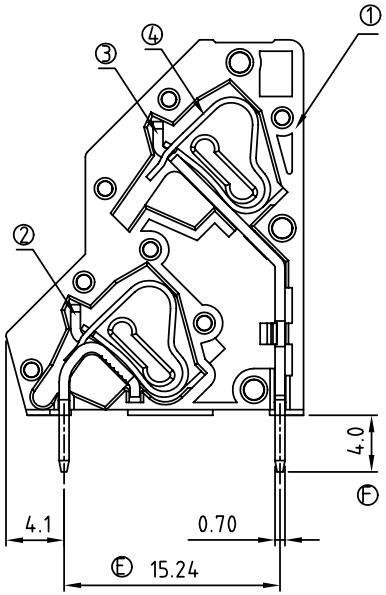


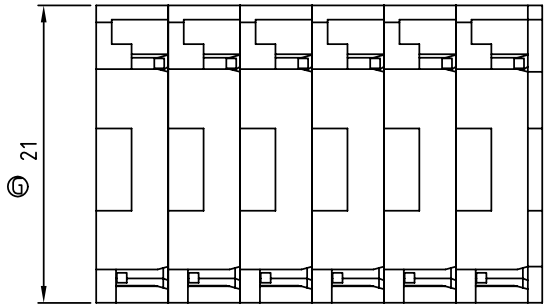


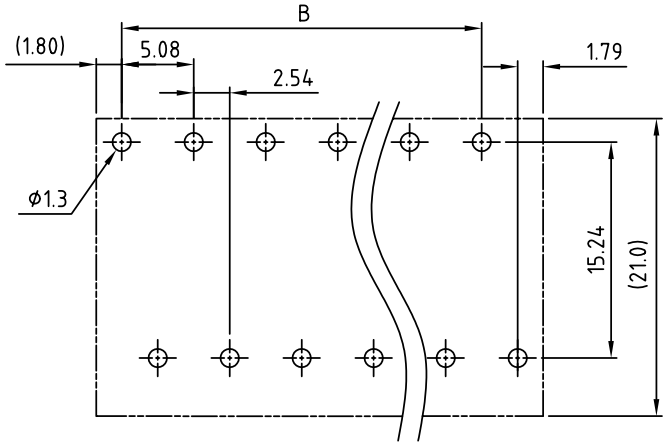


## Material

- Item ① Terminal body: Thermoplastic ( UL94V-0 )
- Item ② Spring clamp of short : Brass Tin plated.
- Item ③ Spring clamp of long : Brass Tin plated.
- Item ④ Spring clamp: Stainless steel
- Item ⑤ Terminal cover : Thermoplastic ( UL94V-0 )

| Electrical: | cULus |
|---|---|
| Voltage rating: | 300V |
| Current rating: | 10A |
| Wire range: | |
| Solid wire(AWG): | 12-28 |
| Stranded wire(AWG): | 12-28 |
| Wire strip length: | 5-6mm |
| Withstanding Voltage: | 1.6KV |
| Operating temperature: | -40°C to +115°C |
| Soldering temperature: | 250°C±10°C/5 Sec |
| ⚠1 Safety Approval: | c UL us |

HQ xx 30 x 1 xxxx G

- xx: Poles
  - 04 2×2Poles
  - 06 2×2Poles
  - ...
  - 48 2×24Poles
- 30: Color
  - 0 Black
  - 5 Green
  - 6 Blue
  - 8 Grey
- 1: 
- xxxx:
  - 0000 Standard @ Logo
  - 000A Standard ANY Logo
  - Any special item by customer request, please contact sales department.
- G: RoHS Pb<40,000ppm

P=Number of Poles

| POLE | | 2x2 | 2x3 | 2x4 | 2x5 | 2x6 | 2x7 | 2x8 | 2x9 | 2x10 | 2x11 | 2x12 |
|---|---|---|---|---|---|---|---|---|---|---|---|---|
| A | | 11.16 | 16.24 | 21.32 | 26.40 | 31.48 | 36.56 | 41.46 | 46.72 | 51.80 | 56.88 | 61.96 |
| B | | 5.08 | 10.16 | 15.24 | 20.32 | 25.40 | 30.48 | 35.56 | 40.64 | 45.72 | 50.80 | 55.88 |
| Tol. | | ±0.10 | | | | | ±0.15 | | | | | |
| POLE | 2x13 | 2x14 | 2x15 | 2x16 | 2x17 | 2x18 | 2x19 | 2x20 | 2x21 | 2x22 | 2x23 | 2x24 |
| A | 67.04 | 72.12 | 77.20 | 82.28 | 87.36 | 92.44 | 97.52 | 102.60 | 107.68 | 112.76 | 117.84 | 122.92 |
| B | 60.96 | 66.04 | 71.12 | 76.20 | 81.28 | 86.36 | 91.44 | 96.52 | 101.60 | 106.68 | 111.76 | 116.84 |
| Tol. | ±0.20 | | | ±0.30 | | | | | | | | |

**ANYTEK**

**CUSTOMER COPY**

ALL RIGHTS RESERVED. REPRODUCTION OR ISSUE TO THIRD PARTIES IN ANY FORM WHATEVER IS NOT PERMITTED WITHOUT WRITTEN AUTHORITY FROM THE PROPRIETOR. PROPERTY OF ANYTEK TECHNOLOGY CO., LTD

| | | | | | | |
|---|---|---|---|---|---|---|
| TITLE | HQ 5.08mm Series (Solder pins staggered by half the pin spacing) | | | | | |
| PART NO. | HQxx30x1xxxxG | | | DWG NO. | 8HQ0101 | |
| APPROVED | CHECKED | DESIGNED | DRAWN | CUST NO. | | Tolerance |
| | | Runner 2010.05.13 | Runner 2010.05.13 | | UNIT: mm | X. ±0.50 |
| | | | | | SCALE: NONE | X.X ±0.30 |
| | | | | SHEET: 01/01 | REV.: C | X.XX ±0.10 |
| | | | | | | X° ±1° |