SIGN	DATE	DESCRIPTION	APPROVER
1	2010.03.08	Add the 2P mark	Jacke
THIS IS CAD DRAWING, DO NOT REVISE MANUALLY!!!			

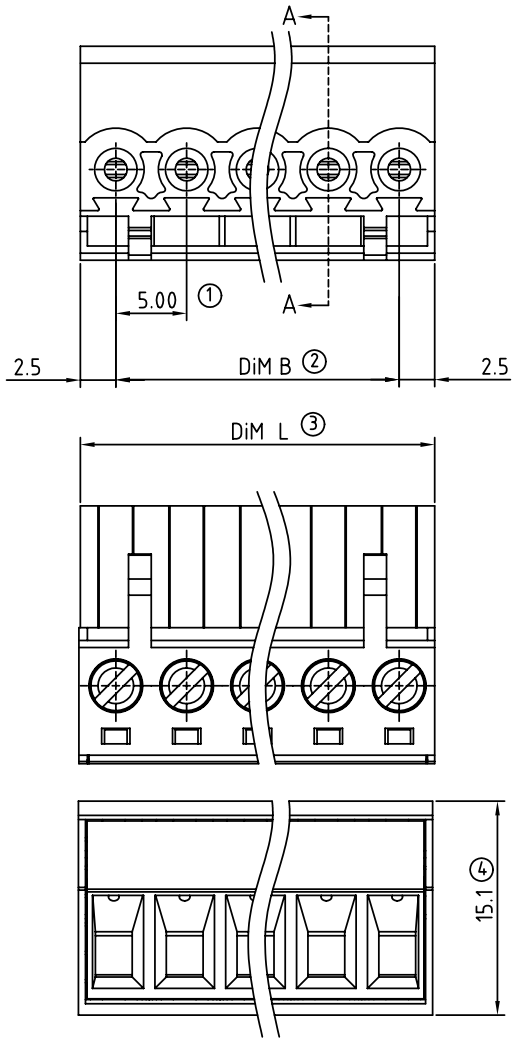

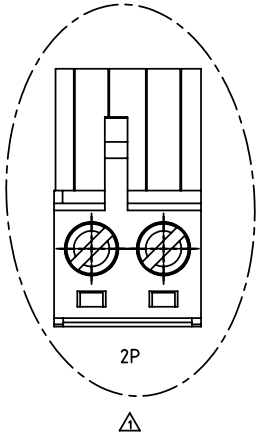

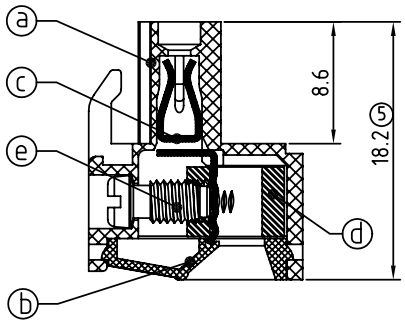

SECTION A-A

Material

- Item a Terminal body:Thermoplastic (UL94V-0)
- Item b Terminal cover:Thermoplastic (UL94V-0)
- Item c Female contact:PhBz (CuSn) Tin plated
- Item d Clamp:Brass:Ni plated
- Item e Terminal screw:Steel Zinc plating "-" slot type

Electrical

- Voltage rating:300V
- Current rating:20A
- Solid wire(AWG):12-24
- Stranded wire(AWG):12-24
- Torque(Lb-In): 5
- Screw: M3
- Wire strip length: 7-8mm
- Withstanding Voltage: 1.6KV
- Operating temperature: -40°C to +115°C
- Safeyt Approval: c us

TJ xx 71x 6 xxxx G

- xx: 02 2 POLES; 03 3 POLES; ... ...; 24 24 POLES
- 71x: 0 Black (RAL9005); 2 Red (RAL3001/D); 3 Orange(RAL2011/P); 4 Yellow(RAL1018/A); 5 Green(RAL6018/T); 6 Blue (RAL5015/A); 8 Grey(RAL7035/D)
- xxxx: 000 0 Standard @ Logo; 000 A Standard ANY Logo; Any special item by customer request, please contact sales department.
- G: Pb < 40,000ppm (RoHS)

Poles	02	03	04	05	06	07	08	09	10	11	12	13
Dim L	10.00	15.00	20.00	25.00	30.00	35.00	40.00	45.00	50.00	55.00	60.00	65.00
Dim B	5.00	10.00	15.00	20.00	25.00	30.00	35.00	40.00	45.00	50.00	55.00	60.00
TOL	±0.15				±0.20					±0.25		

Poles	14	15	16	17	18	19	20	21	22	23	24	
Dim L	70.00	75.00	80.00	85.00	90.00	95.00	100.00	105.00	110.00	115.00	120.00	
Dim B	65.00	70.00	75.00	80.00	85.00	90.00	95.00	100.00	105.00	110.00	115.00	
TOL	±0.25		±0.30					±0.40				

ANYTEK

CUSTOMER COPY

ALL RIGHTS RESERVED. REPRODUCTION OR ISSUE TO THIRD PARTIES IN ANY FORM WHATEVER IS NOT PERMITTED WITHOUT WRITTEN AUTHORITY FROM THE PROPRIETOR. PROPERTY OF ANYTEK TECHNOLOGY CO., LTD

TITLE	TJ 5.0 Series Without flange contact on up side				
PART NO.	TJxx71x6xxxxG			DWG NO.	8TJ0901
APPROVED	CHECKED	DESIGNED	DRAWN	CUST NO.	
		Jacke 2010.03.08	Jacke 2010.03.08	UNIT: mm	
				SCALE: NONE	
				SHEET: 01/01	REV.: C

Tolerance	
X.	±0.50
X.X	±0.30
X.XX	±0.10
X°	±1°