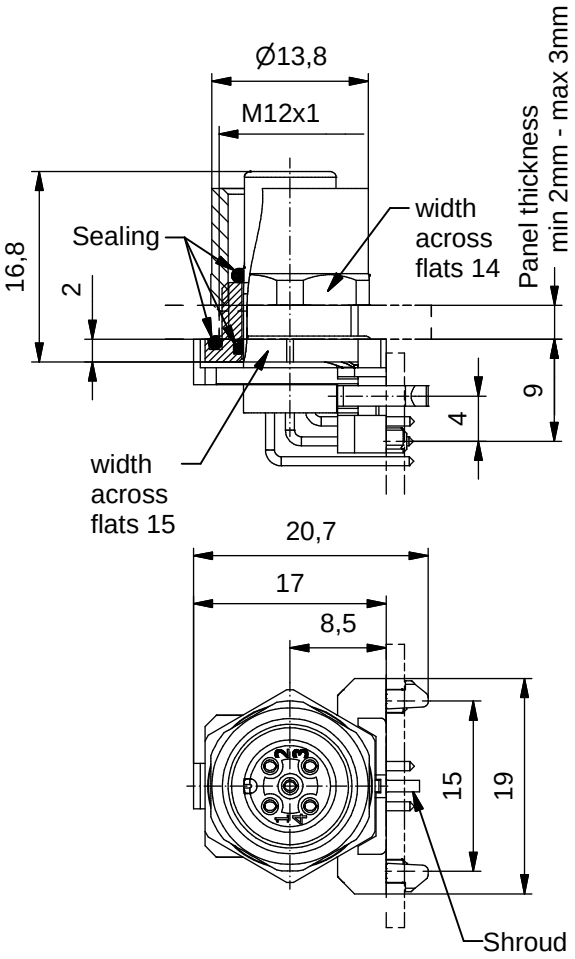

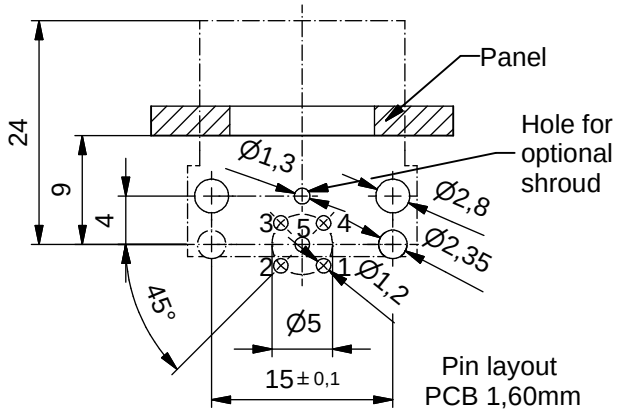

Technical specification:

Rated voltage: IEC 61076-2-101	4pos 5pos 250 V 60 V
Current rating: IEC 61076-2-101	4 A at 40°C
Insulation resistance: IEC 60512	>=100 MΩ
Pollution degree: IEC 60664-1	3/2
Degree of protection: IEC 60529	IP 67, in mated condition
Temperature range: EN 60512-11-10 EN 60512-11-4	-30°C ... +85°C -40°C -40°C ... +85°C
Mating cycles: IEC 60512-9a	>=100

Materials:

Contact:	CuZn, Ni b / Au 0,2 gal.
Contact carrier:	PA GF, UL 94 V-0
Sealing:	FPM / NBR
Socket housing:	CuZn, nickel plated
Shroud:	spring steel, nickel plated

Installation specification:

recommended torque:	0,8-1 Nm
Conec installation tool:	Torque wrench: 36-000200 Insert across flats 14: 36-000370 Insert across flats 15: 36-000320

feedthrough

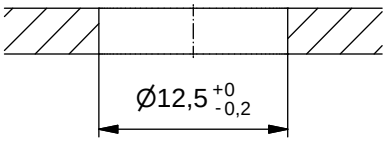

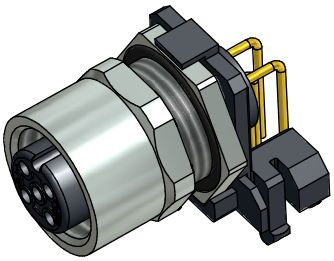

Part no:	Description:	Pos	Note:
43-01196	SAL - 12 - FKHW4	4	
43-01197	SAL - 12S - FKHW4	4	with shroud
43-01198	SAL - 12 - FKHW5	5	
43-01199	SAL - 12S - FKHW5	5	with shroud

DO NOT ALTER CAD DRAWING BY HAND

RoHS & REACH compliant

Index: d 26.08.13 MG Ä4884
Data sheet revised, width across flats changed, installation specification added

dim. in mm

	date	name
drawn	17.10.07	Fromm
appd.	29.02.08	W.Schmidt

general tolerance:

0	± 0,50mm
0,0	± 0,25mm
0,00	± 0,10mm
∡	± 1,5°

THIS DRAWING MAY NOT BE COPIED OR REPRODUCED IN ANY WAY, AND MAY NOT BE PASSED ON TO A THIRD PARTY WITHOUT WRITTEN PERMISSION. OWNERSHIP AND COPYRIGHT OF CONEC GmbH

title:

Female socket M12x1 angled, backmounting, dip solder

dwg no:

43K1A511

part no: