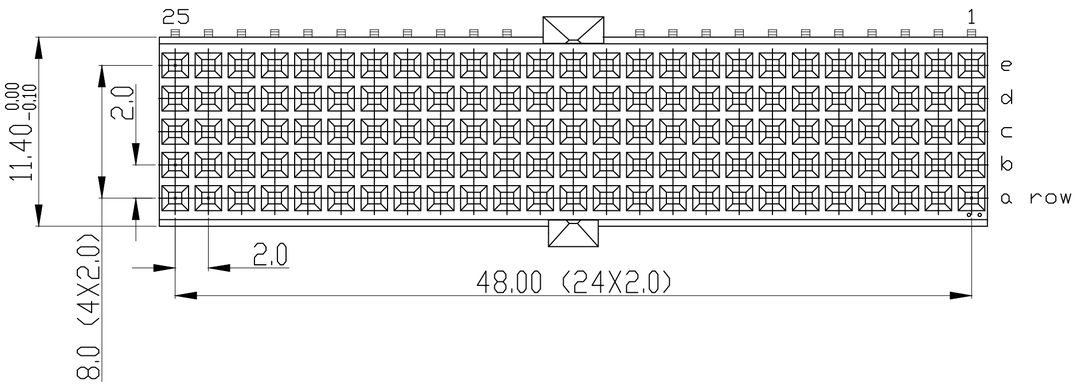

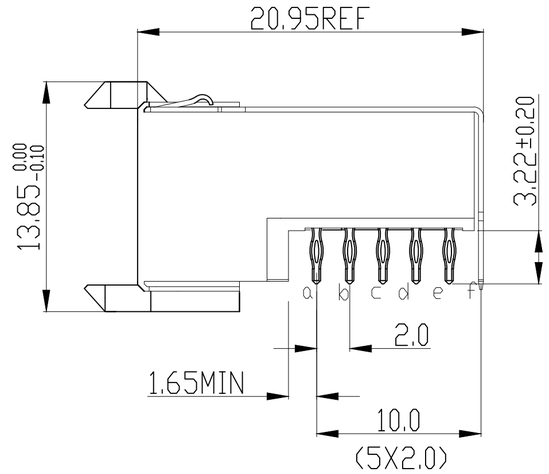

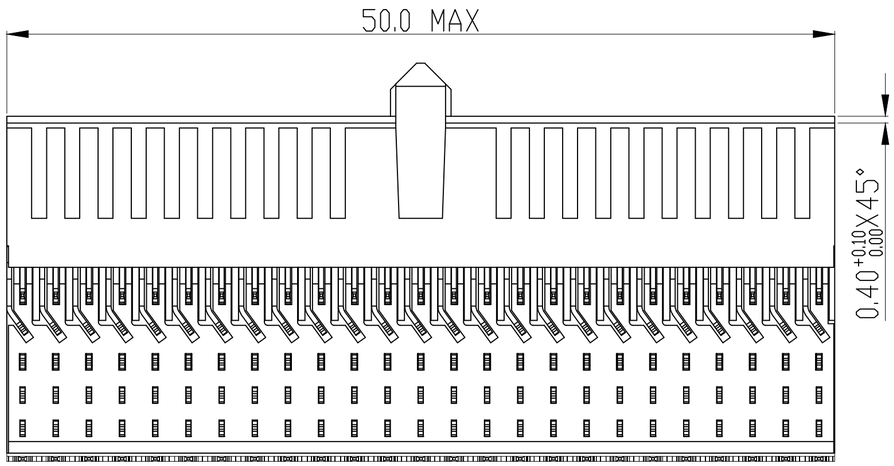

PERFORMANCE CHARACTERISTICS

CURRENT RATING: 1.5 A AT 20°C (FULLY LOADED)
1 A AT 70°C (FULLY LOADED)

RATED VOLTAGE:500 V AC (CONT /CONT)

OPERATING TEMPERATURE : -55°C TO 125°C

CONTACT RESISTANCE :20 mΩ MAX

INSERTION FORCE: 0.75N MAX/CONT

EXTRACTION FORCE : 0.15N MIN /CONT

INSULATION RESISTANCE: 10^4 MΩ MIN

HM2R65PA510F

LEAD FREE INDICATOR : LF = LEAD FREE
(DIGIT 15 & 16)

PLATING CODE (DIGIT 13 AND 14)
(PLEASE REFER BELOW TABLE)

PLATING CODE	PLATING	PERFORMANCE LEVEL
AA	0.75µm Au	IEC PERFORMANCE LEVEL 2 (250 MATING CYCLES) OR TELCORDIA CO
AB	1.25µm Au	TELCORDIA UE

NOTES

1. THIS PRODUCT IS CSA APPROVED.
2. THIS PRODUCT MEETS EUROPEAN UNION DIRECTIVES AND OTHER COUNTRY REGULATIONS AS DESCRIBED IN GS-47-0004
3. FOR RECOMMENDED PTH DIMENSIONS REFER DRAWING : BS, A , 201572 , 001

CATALOG NO: HM2R65PA510F----

LAY-OUT P.C.B.-HOLE

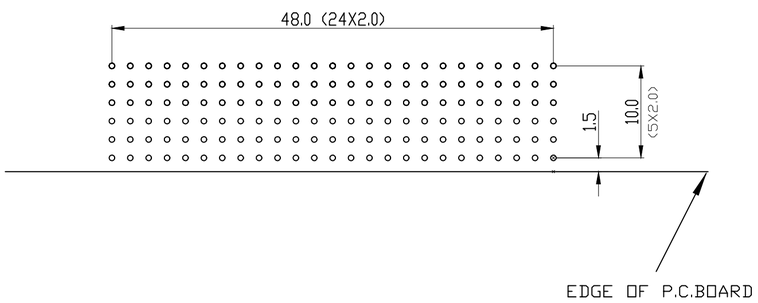

mat'l. code				surface ISO 1302	tolerance ISO 406 ISO 1101	projection	product family MILLIPACS
ltr	ecn no	dr	date	tolerances unless otherwise specified			title
A	I15-0016	AKA	2015-08-12	angles	linear .0±0.2	MM	MPACS 5R RA REC PF CONN TYPE AB 25 POS.
					.00±0.1		
				0°±1°		scale –	
				dr	ARJUN K A 2015-08-12		dwg no BS, C ,201418, 070 — sheet 1 of 1 — size A3
				engr	ARJUN K A 2015-08-12		
				chr	ALEX BABU 2015-08-12		
				appd	BIJU K PAUL 2015-08-12		type Product Customer Drawing
sheet index	revision	A					
	sheet	1					

FCIconnect.com
Copyright FCI