SIGN	DATE	DESCRIPTION	APPROVER
1			

THIS IS CAD DRAWING, DO NOT REVISE MANUALLY!!!

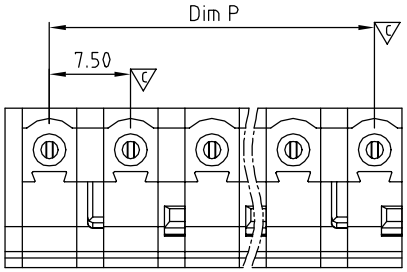

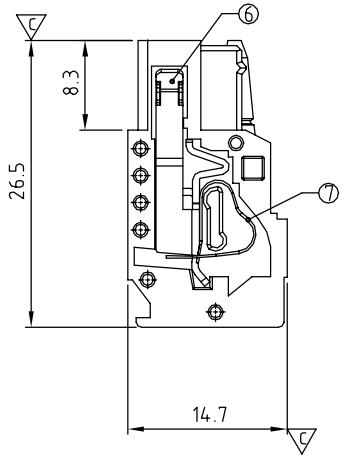

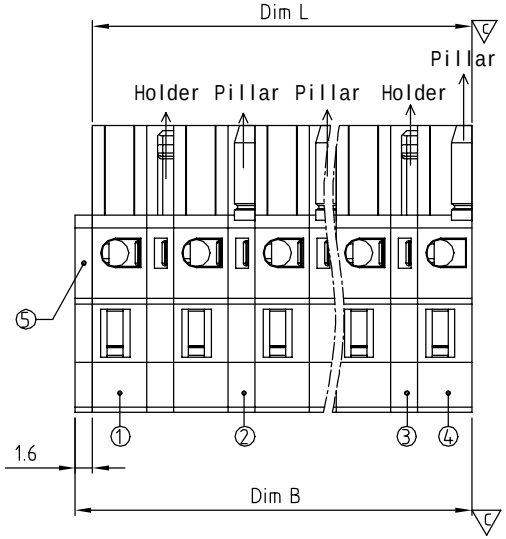

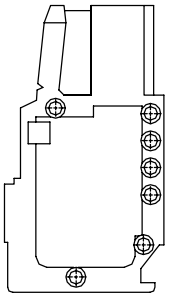

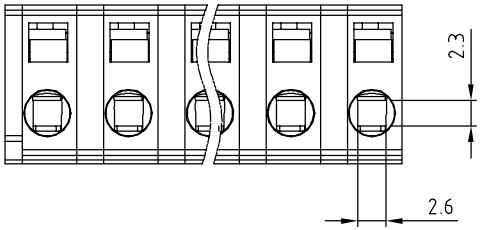

Material:

- Item ① Terminal housing: Thermoplastic (UL94V-0)
- Item ② Pad board(With pillar): Thermoplastic (UL94V-0)
- Item ③ Pad board(With holder): Thermoplastic (UL94V-0)
- Item ④ Terminal housing(With pillar): Thermoplastic (UL94V-0)
- Item ⑤ Terminal cover: Thermoplastic (UL94V-0)
- Item ⑥ Femlale contact: PhBz. Tin plated
- Item ⑦ Spring Clamp: Stainless steel

Electrical:	cULus
Voltage rating:	300 V
Current rating:	8 A
Wire range:	
Solid wire(AWG):	12-28
Stranded wire(AWG):	12-28
Wire strip length:	8-9 mm
Withstanding Voltage:	1.6KV
Operating temperature:	-40°C to +115°C
Critical dimension:	▽

HI xx 2 1 x 0 xxxx G

No. OF POLES
02: 2 POLES
:
:
16: 16 POLES

COLOR
0: BLACK (RAL 9005)
5: GREEN (RAL 6018/T)
6: BLUE (RAL 5015/A)
8: GREY (RAL 7035/D)

G: Pb<40000ppm

0000: Standard
Any special item by customer requst. please contact sales department.

N = Number of poles

DIM		TOL			
		2P-4P	5P-8P	9P-12P	13P-16P
Dim L	N×7.5-2.5	±0.15	±0.25	±0.30	±0.40
Dim P	(N-1)×7.5	±0.15	±0.25	±0.30	±0.40
Dim B	N×7.5-0.9	±0.15	±0.25	±0.30	±0.40

Layout of Holder and Pillar:

2P	Holder+Pillar
3P	Holder+Holder+Pillar
4P	Holder+Pillar+Holder+Pillar
5P	Holder+Pillar+Pillar+Holder+Pillar
5P over	Holder+Pillar+pillar...+Pillar+Holder+Pillar

ANYTEK

CUSTOMER COPY

ALL RIGHTS RESERVED. REPRODUCTION OR ISSUE TO THIRD PARTIES IN ANY FORM WHATEVER IS NOT PERMITTED WITHOUT WRITTEN AUTHORITY FROM THE PROPRIETOR. PROPERTY OF ANYTEK TECHNOLOGY CO., LTD

TITLE	HI 7.5mm -With hook 100% protected against mismating				
PART NO.	HIxx21x0xxxxG			DWG NO.	8HI0701
APPROVED	CHECKED	DESIGNED	DRAWN	CUST NO.	
			Chen Bo 2011.05.31	UNIT: mm	
				SCALE: NONE	
				SHEET: 01/01	REV.: B

Tolerance	
X.	±0.50
X.X	±0.30
X.XX	±0.10
X°	±1°