THIS DRAWING IS UNPUBLISHED. RELEASED FOR PUBLICATION - ,- .
© COPYRIGHT - By - ALL RIGHTS RESERVED.

LOC	DIST
—	—

REVISIONS

P	LTR	DESCRIPTION	DATE	DWN	APVD
	J	REVISED PER ECO-15-016062	09NOV15	KG	CD

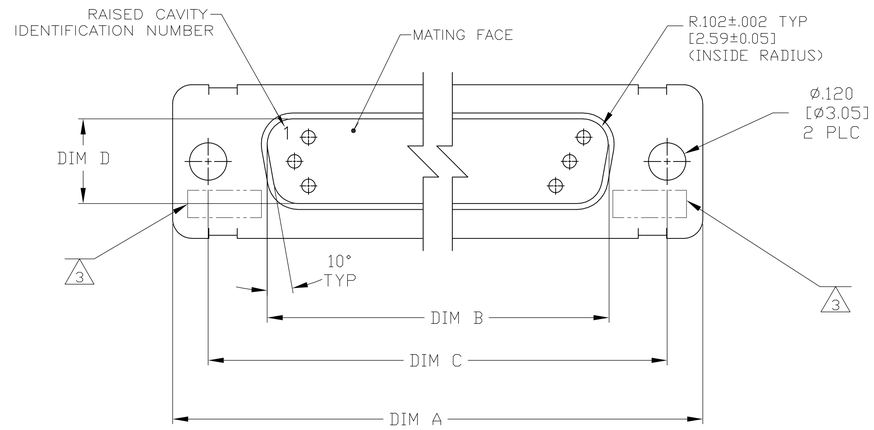

1. THE CONNECTOR DESCRIBED IN THIS DOCUMENT WILL MATE WITH ANY RECEPTACLE CONNECTOR WITH THE SAME INSERT ARRANGEMENT.
2. MARKED WITH .047-.062 [1.19-1.57] HIGH CHARACTERS. FAR SIDE REFERS TO THE WIDE SIDE OF THE KEYSTONE. NEAR SIDE REFERS TO THE NARROW SIDE OF THE KEYSTONE. WHEN SPACE IS LIMITED MARKING CAN BE SPLIT BETWEEN FRONT AND REAR SHELL.
3. UL/CSA DESIGNATION MARKED IN THIS AREA. (SIZE 1 THROUGH 5 ONLY)
4. CONNECTOR ASSEMBLY WITHOUT CONTACTS, MFG'S P/N 204370-2. MUST BE ORDERED SEPARATELY.
5. CONNECTOR ASSEMBLY SUPPLIED WITH CONTACTS, MFG'S P/N 204370-2. PACKAGED IN A SEPARATE CONTAINER. QTY = NO. OF POSN. (SEE TABLE).

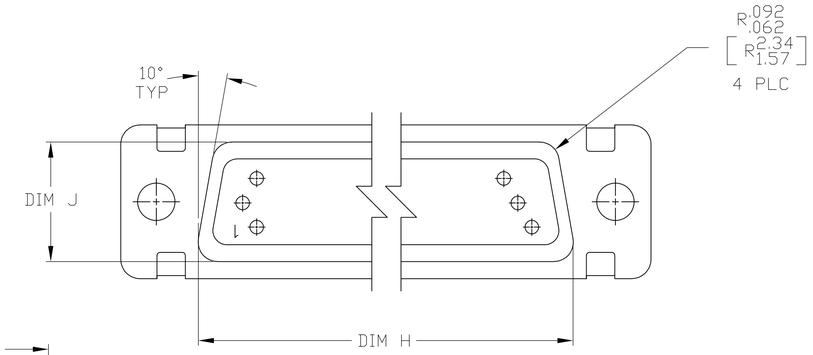

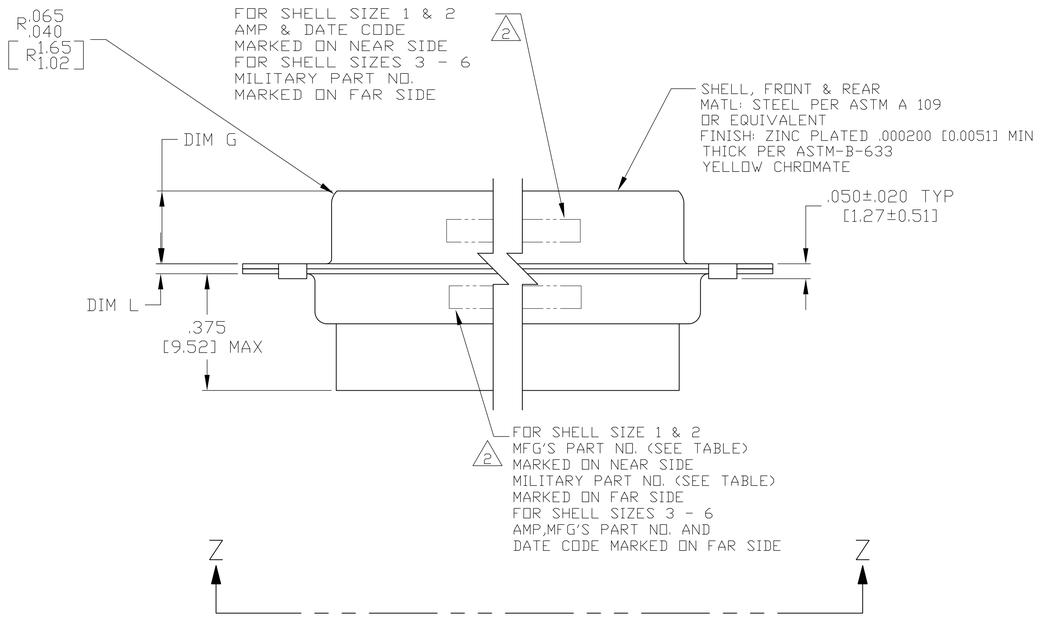

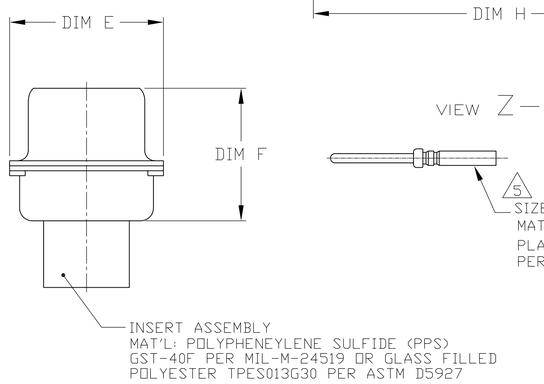

VIEW Z—Z

5 SIZE 22 PIN CONTACT
MATERIAL: COPPER ALLOY PER MIL-C-39029 & MIL-DTL-24308.
PLATING: GOLD PER ASTM-B-488 (TYPEII) OVER NICKEL
PER QQ-N-290.

REMARKS	MILITARY P/N ON PACKAGE	MILITARY P/N ON CONNECTOR 2	MARKED 2 MFG'S PART NUMBER	L	J	H	G	F	E	D	C	B	A	INSERT ARRANGEMENT	NO OF POS	SHELL SIZE	PART NUMBER
5	M24308/4-16Z	M24308/4-16Z	1-1757823-2	.049 [1.24] .029 [0.74]	.606 [15.39] .586 [14.88]	2.312 [58.72] 2.292 [58.22]	.236 [5.99] .224 [5.69]	.436 [11.07] .416 [10.57]	.683 [17.35] .653 [16.59]	.508 [12.90] .498 [12.65]	2.505 [63.63] 2.495 [63.37]	2.217 [56.31] 2.207 [56.06]	2.744 [69.70] 2.714 [68.94]	MS14004-1	104	6	1-1757823-2
5	M24308/4-15Z	M24308/4-15Z	1-1757823-1	.049 [1.24] .029 [0.74]	.544 [13.82] .524 [13.31]	2.188 [55.58] 2.168 [55.07]	.236 [5.99] .224 [5.69]	.436 [11.07] .416 [10.57]	.620 [15.75] .590 [14.99]	.446 [11.33] .436 [11.07]	2.411 [61.24] 2.401 [60.99]	2.084 [52.93] 2.074 [52.68]	2.650 [67.31] 2.620 [66.55]	MS18277-2	78	5	1-1757823-1
5	M24308/4-14Z	M24308/4-14Z	1-1757823-0	.049 [1.24] .029 [0.74]	.432 [10.97] .412 [10.46]	2.282 [57.96] 2.262 [57.45]	.236 [5.99] .224 [5.69]	.436 [11.07] .416 [10.57]	.509 [12.93] .479 [12.17]	.334 [8.48] .324 [8.23]	2.505 [63.63] 2.495 [63.37]	2.187 [55.55] 2.177 [55.30]	2.744 [69.70] 2.714 [68.94]	MS18276-2	62	4	1-1757823-0
5	M24308/4-13Z	M24308/4-13Z	1757823-9	.049 [1.24] .029 [0.74]	.432 [10.97] .412 [10.46]	1.635 [41.53] 1.615 [41.02]	.236 [5.99] .224 [5.69]	.436 [11.07] .416 [10.57]	.509 [12.93] .479 [12.17]	.334 [8.48] .324 [8.23]	1.857 [47.17] 1.847 [46.91]	1.539 [39.09] 1.529 [38.84]	2.103 [53.42] 2.073 [52.65]	MS18275-2	44	3	1757823-9
5	M24308/4-12Z	M24308/4-12Z	1757823-8	.040 [1.02] .020 [0.51]	.432 [10.97] .412 [10.46]	1.093 [27.76] 1.073 [27.25]	.238 [6.05] .229 [5.82]	.432 [10.97] .412 [10.46]	.509 [12.93] .479 [12.17]	.334 [8.48] .324 [8.23]	1.317 [33.45] 1.307 [33.20]	.999 [25.37] .989 [25.12]	1.556 [39.52] 1.526 [38.76]	MS18274-2	26	2	1757823-8
5	M24308/4-11Z	M24308/4-11Z	1757823-7	.040 [1.02] .020 [0.51]	.432 [10.97] .412 [10.46]	.769 [19.53] .749 [19.02]	.238 [6.05] .229 [5.82]	.432 [10.97] .412 [10.46]	.509 [12.93] .479 [12.17]	.334 [8.48] .324 [8.23]	.989 [25.12] .979 [24.87]	.671 [17.04] .661 [16.79]	1.228 [31.19] 1.198 [30.43]	MS18273-2	15	1	1757823-7
4	M24308/4-269Z	M24308/4-16Z	1-1757823-2	.049 [1.24] .029 [0.74]	.606 [15.39] .586 [14.88]	2.312 [58.72] 2.292 [58.22]	.236 [5.99] .224 [5.69]	.436 [11.07] .416 [10.57]	.683 [17.35] .653 [16.59]	.508 [12.90] .498 [12.65]	2.505 [63.63] 2.495 [63.37]	2.217 [56.31] 2.207 [56.06]	2.744 [69.70] 2.714 [68.94]	MS14004-1	104	6	1757823-6
4	M24308/4-268Z	M24308/4-15Z	1-1757823-1	.049 [1.24] .029 [0.74]	.544 [13.82] .524 [13.31]	2.188 [55.58] 2.168 [55.07]	.236 [5.99] .224 [5.69]	.436 [11.07] .416 [10.57]	.620 [15.75] .590 [14.99]	.446 [11.33] .436 [11.07]	2.411 [61.24] 2.401 [60.99]	2.084 [52.93] 2.074 [52.68]	2.650 [67.31] 2.620 [66.55]	MS18277-2	78	5	1757823-5
4	M24308/4-267Z	M24308/4-14Z	1-1757823-0	.049 [1.24] .029 [0.74]	.432 [10.97] .412 [10.46]	2.282 [57.96] 2.262 [57.45]	.236 [5.99] .224 [5.69]	.436 [11.07] .416 [10.57]	.509 [12.93] .479 [12.17]	.334 [8.48] .324 [8.23]	2.505 [63.63] 2.495 [63.37]	2.187 [55.55] 2.177 [55.30]	2.744 [69.70] 2.714 [68.94]	MS18276-2	62	4	1757823-4
4	M24308/4-266Z	M24308/4-13Z	1757823-9	.049 [1.24] .029 [0.74]	.432 [10.97] .412 [10.46]	1.635 [41.53] 1.615 [41.02]	.236 [5.99] .224 [5.69]	.436 [11.07] .416 [10.57]	.509 [12.93] .479 [12.17]	.334 [8.48] .324 [8.23]	1.857 [47.17] 1.847 [46.91]	1.539 [39.09] 1.529 [38.84]	2.103 [53.42] 2.073 [52.65]	MS18275-2	44	3	1757823-3
4	M24308/4-265Z	M24308/4-12Z	1757823-8	.040 [1.02] .020 [0.51]	.432 [10.97] .412 [10.46]	1.093 [27.76] 1.073 [27.25]	.238 [6.05] .229 [5.82]	.432 [10.97] .412 [10.46]	.509 [12.93] .479 [12.17]	.334 [8.48] .324 [8.23]	1.317 [33.45] 1.307 [33.20]	.999 [25.37] .989 [25.12]	1.556 [39.52] 1.526 [38.76]	MS18274-2	26	2	1757823-2
4	M24308/4-264Z	M24308/4-11Z	1757823-7	.040 [1.02] .020 [0.51]	.432 [10.97] .412 [10.46]	.769 [19.53] .749 [19.02]	.238 [6.05] .229 [5.82]	.432 [10.97] .412 [10.46]	.509 [12.93] .479 [12.17]	.334 [8.48] .324 [8.23]	.989 [25.12] .979 [24.87]	.671 [17.04] .661 [16.79]	1.228 [31.19] 1.198 [30.43]	MS18273-2	15	1	1757823-1

THIS DRAWING IS A CONTROLLED DOCUMENT.

DIMENSIONS: INCHES

TOLERANCES UNLESS OTHERWISE SPECIFIED:
0 PLC ± –
1 PLC ± –
2 PLC ± –
3 PLC ± .005 [0.13]
4 PLC ± –
ANGLES ± 1°

MATERIAL: SEE CALLOUTS
FINISH: SEE CALLOUTS

DWN C.C.THOMAS 6-3-05
CHK D.MILLER 6-8-05
APVD D.MILLER 6-8-05
PRODUCT SPEC —
APPLICATION SPEC —
WEIGHT —

TE Connectivity

NAME: AMPLIMITE PLUG ASSY,SIZE 1 THRU 6 SERIES 90 WITH ZINC PLATED SHELLS

SIZE A1 | CAGE CODE 00779 | DRAWING NO C-1757823 | RESTRICTED TO —

CUSTOMER DRAWING | SCALE 4:1 | SHEET 1 OF 1 | REV J

4805 (3/11)