PART NO.	DIM. "A"	DIM. "B"	DIM. "C"	DIM. "D"	DIM. "E"	DIM. "F"	DIM. "G"	HOLE DIA. ±.003 (±0.08)
WSLT-3.5-2-1-01	.14 (3.4)	.53 (13.5)	.35 (8.9)	.77 (19.6)	.38 (9.5)	.118 (3.0)	.10 (2.5)	.138 (3.50)
WSLT-02-1			.37 (9.4)		.56 (14.3)	7/32 (5.6)	.11 (2.8)	.187 (4.75)
WSLT-01A	.19 (4.8)	.42 (10.7)	.42 (10.6)	.66 (16.8)				
WSLT-01-2	.35 (8.8)		.57 (14.6)					
WSLT-02A	.39 (10.0)	.64 (16.3)	.62 (15.8)	.88 (22.4)				
WSLT-03-2	.55 (14.1)		.77 (19.6)					
WSLT-03-3	.85 (21.7)	.71 (18.0)	1.07 (27.3)	.95 (24.1)				

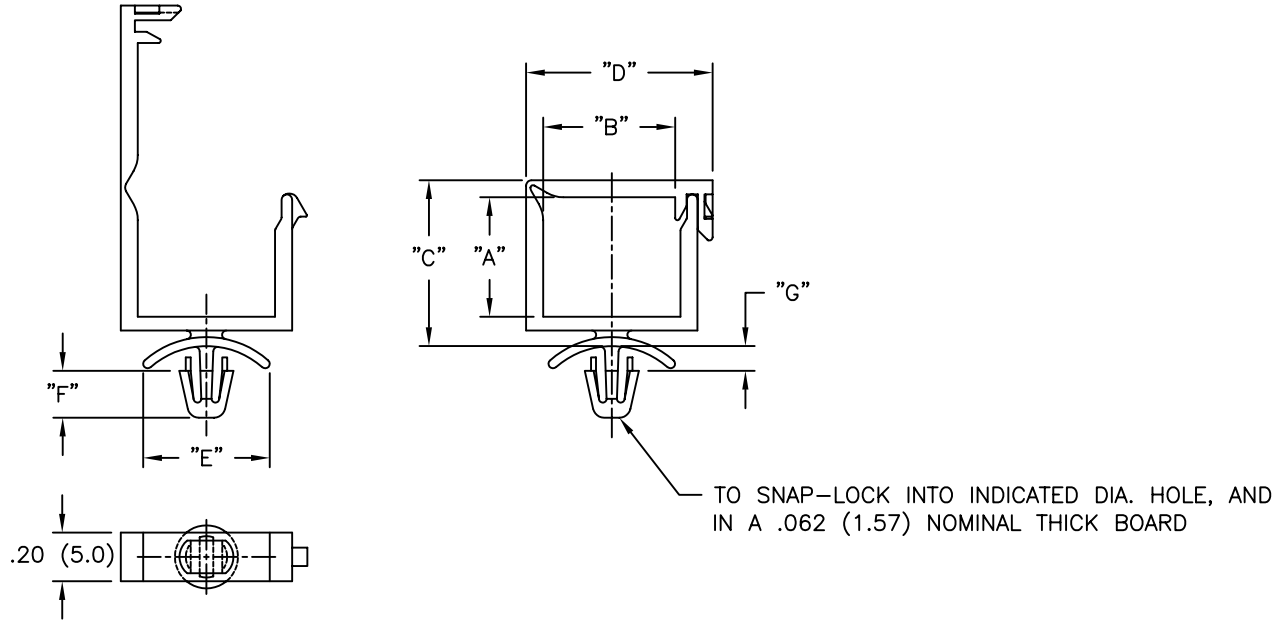

NOTES:

1. MATERIAL: NYLON 6/6 (RMS-01), UL94 V-2.
   FLAME RETARDANT, NYLON (RMS-19), UL94 V-0,
   AVAILABLE BY SPECIAL ORDER ONLY.
   SPECIFIED MATERIALS COMPLY WITH STANDARD SS-00259-1.
2. COLOR: NATURAL.
3. ALL DIMENSIONS ARE REFERENCE.

REV	DESCRIPTION	ENGR	DATE
I	SEE ECN #853 FOR CHANGES	SM	09.20.04
–	SEE ENGINEERING FOR REV. A-H	–	

TITLE: WIRE SADDLE-LOCKING TOP

DWG IN IN (MM)

TOLERANCES UNLESS NOTED
.XX=±.010
.XXX=±.005
FRAC=±1/64
ANG=±1°

FILE # WSLT
MAT'L: SEE NOTES
RE: RICHCO, INC.

DWN: SM
DT: 03/06/02
APP:
DT:

RICHCO INC.
PO BOX 804238,CHICAGO,60680
(773) 539-4060

FINAL

PART # SEE TABLE

PRINT TYPE CA