| Honeywell | LIMIT SWITCH | GKM |
|---|---|---|
| | | MTG-GK-207 |

MTG-GK-207

REPLACES

DRAWING NUMBER M

RELEASE No. A020-12

ISSUE 13

| REVISIONS | |
|---|---|
| 2 | PR#5 |
| | I. WEIR |
| 3 | CO#123 |
| | J. BOYD |
| 4 | CO#351 |
| | J. BOYD |
| 5 | DR#204 |
| | I. WEIR |
| 6 | CO#998 |
| | I. WEIR |
| 7 | CO#1197 |
| | J. BOYD |
| 8 | CO#1629 |
| | J. BOYD |
| 9 | PR#1336 |
| | M. LOCH |
| 10 | CO#2651 |
| | M.LOCH |
| 11 | 0015193 |
| | KRB |
| 12 | 0027801 |
| | MST 24JAN07 |
| 13 | 0039389 |
| | KRB. 03MAY08 |

DO NOT SCALE PRINT

MODIFY ON CAD SYSTEM ONLY

| | | |
|---|---|---|
| DRAWN | M. LOCH | 11/96 |
| CHECK | J. BOYD | 11/96 |
| DESIGN | J. BOYD | 11/96 |
| AUTHOR'N | P.TRICKETT | 11/96 |

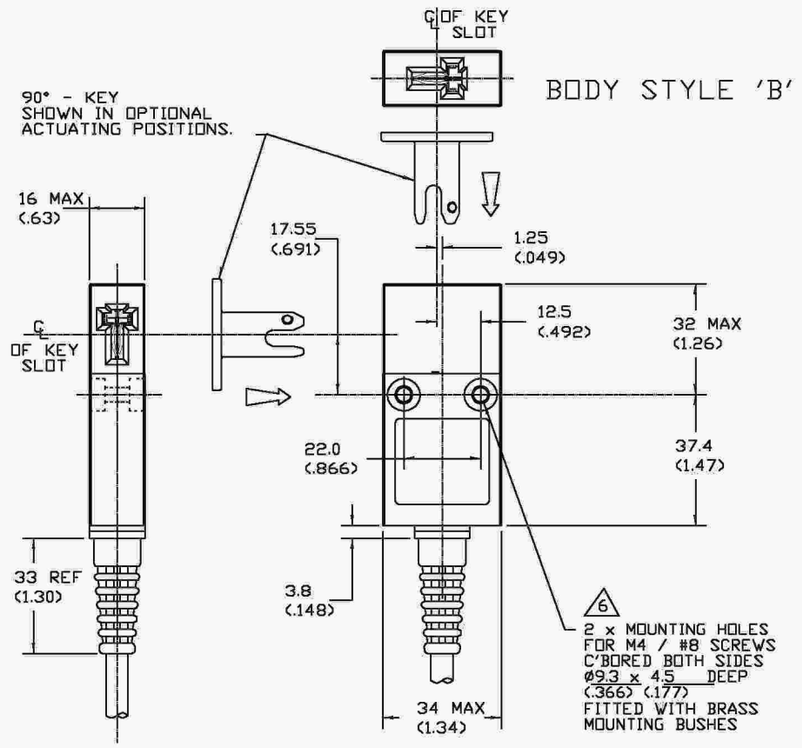


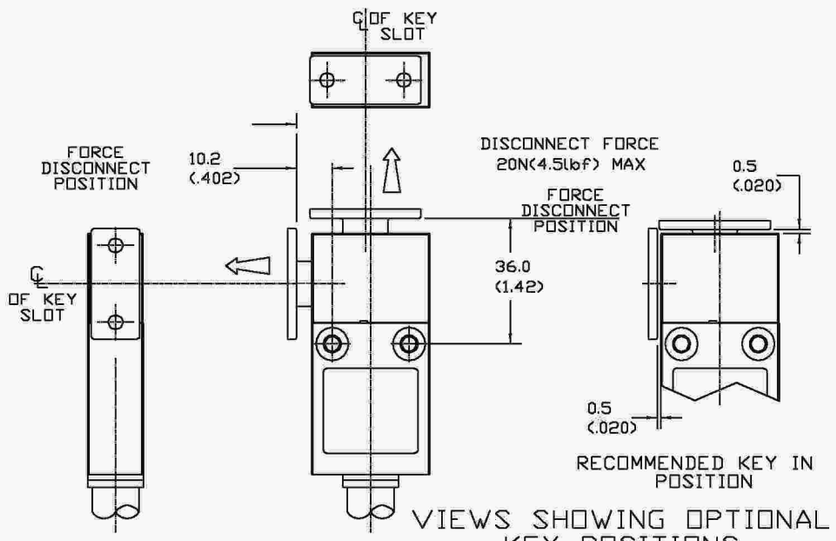


VIEWS SHOWING OPTIONAL KEY POSITIONS

| ELECTRICAL RATINGS FOR BODY STYLE A, B, C, D | | | ELECTRICAL RATINGS BODY STYLE "E" | | ENVIRONMENTAL | APPROVALS |
|---|---|---|---|---|---|---|
| STANDARD Ag CONTACTS | | Au PLATE CONTACTS | STANDARD Ag CONTACTS | Au PLATED CONTACTS | | |
| AC | DC | | | | | |
| B300 AC15 Ue Ie | Q300 DC13 Ue Ie | | | | | |
| VOLTS AMPS | VOLTS AMPS | | | | | |
| 120 3 | 125 0.55 | $I_{th}$ = 5A | 30VDC, 2A MAX | 1VDC 10uA MIN | IP67 NEMA 1,12,13 | EN60947-5-1 |
| 240 1.5 | 250 0.27 | 1V 10uA MIN. | | 30VDC 100mA MAX | TEMP RANGE : -25°C TO 85°C, -13°F TO 185°F | |
| $I_{th}$=5A | $U_i$ =500V | 50V 100mA MAX. | $I_{th}$ = 2A | $I_{th}$ = 2A | STORAGE : -40°C TO 85°C, -40°F TO 185°F | |
| | $U_{imp}$ =2.5KV | | | | SHOCK : 50G PER IEC 68-2-27 VIBRATION : 10G PER IEC 68-2-6 | |

THE COPYRIGHT OF THIS DRAWING IS THE PROPERTY OF HONEYWELL LTD. THE DRAWING IS SUPPLIED IN CONFIDENCE AND MUST NOT BE USED FOR ANY PURPOSE OTHER THAN THAT FOR WHICH IT IS SUPPLIED.

THIRD ANGLE PROJECTION

SCALE -

DIMENSIONS ARE IN MM/INCHES.

# GKM D 0 3

| BODY STYLE | |
|---|---|
| A | SIDE EXIT CABLE |
| B | BOTTOM EXIT CABLE |
| C | SIDE EXIT CONNECTOR |
| D | BOTTOM EXIT CONNECTOR |
| E | TWIN CONNECTOR |

| CABLE | |
|---|---|
| 0 | NO CABLE |
| 1 | CABLE |
| & | LENGTH |
| 3 | (METRES) |

| SWITCH TYPE | |
|---|---|
| 3 | SLOW BBM(1N.C 1N.O) |
| 6 | SLOW 2 x N.C. |
| 7 | SLOW 2 x N.C. GOLD PLATED CONTACTS |
| 9 | SLOW BBM(1N.C 1N.O) GOLD PLATED CONTACTS |

NOTES:-

1. RED GLASS FILLED POLYESTER BODY, BLACK GLASS FILLED POLYAMIDE COVER AND STAINLESS STEEL KEY.
2. ENCLOSURE DOUBLE INSULATED TO IEC 536 CLASS II.
3. CABLE IS UL STYLE2661, 105°C 300V. CORES HAVE 105°C RATED PVC OVER 20 AWG (16/0.2MM) BARE COPPER. OUTER SHEATH IS ALSO 105°C RATED PVC AND HAS FINAL O.D. = 6.33±0.2MM.
4. STANDARD CONNECTOR TYPE : BRAD-HARRISON 4 PIN MICROCHANGE, DC STYLE, MALE TYPE, WITH EXTERNAL INTERLOCK THREAD (M12). CONNECTORS HAVE BLACK GLASS FILLED POLTESTER BODY.
5. MINIMUM OPERATING VELOCITY (V min) = 2.0 mm/s (0.08"/s)
   MAXIMUM OPERATING VELOCITY (Vmax) = 200 mm/s (8"/s)
   MAXIMUM OPERATING FREQUENCY (Fmax)= 2 Hz (120 ops/min)
6. RECOMMENDED TIGHTENING TORQUE FOR MOUNTING SCREWS = 1 - 1.4 Nm (9 - 12 in.lbs)
7. NEW LISTINGS WILL NOT INCLUDE ACTUATOR KEYS WHICH WILL BE SOLD SEPARATELY.
   GKZ51M = STRAIGHT KEY , GKZ52M = 90°KEY.
   STANDARD CABLE LENGTHS WILL NOW BE 1 & 3 METRES ONLY.
8. FOR KEYWAY POSITION REFERENCE BODY STYLE "E"
9. FOR MINIMUM DOOR RADIUS : SEE FIGURE "A"

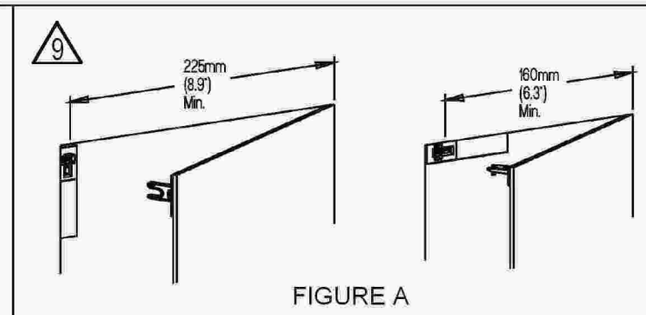


FIGURE A

SLOT DUST COVER

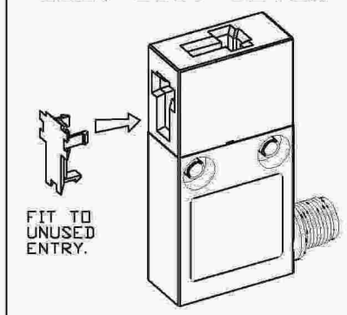


BODY STYLE 'A'

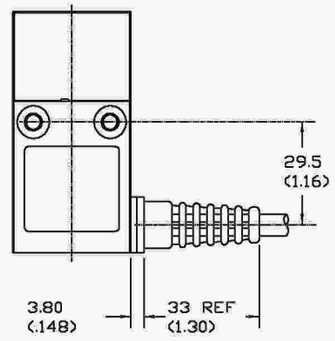


BODY STYLE 'C' 8

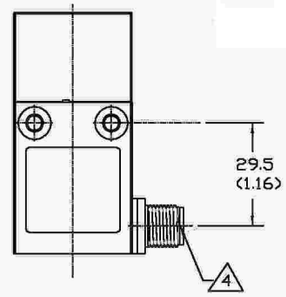


BODY STYLE 'D' 8

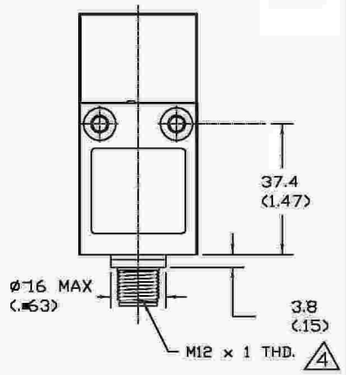


BODY STYLE "E"

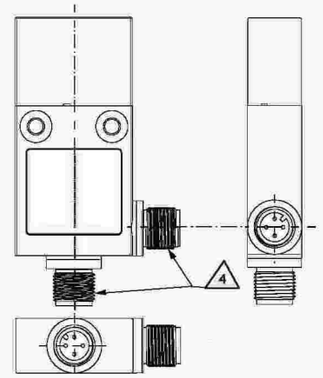


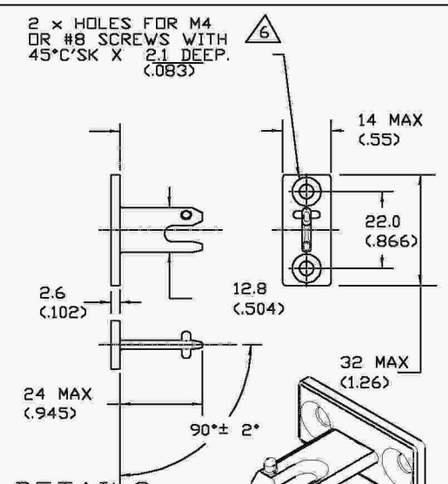


DETAILS OF 90° KEY

GKZ52M - 90° KEY
GKZ52M-BP (BULK PACK, 50PCS.)

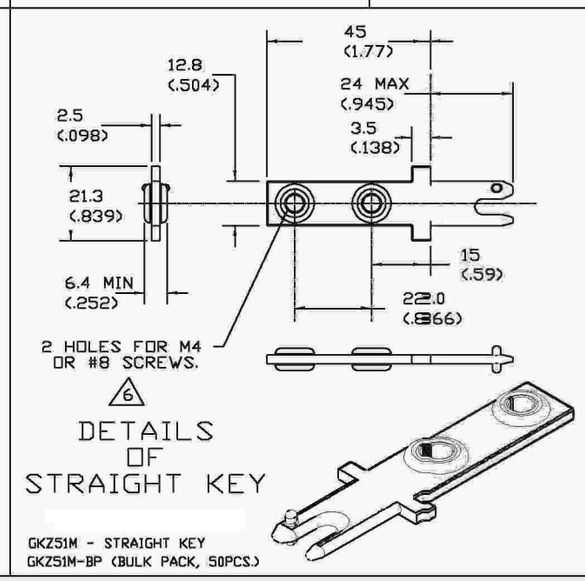


DETAILS OF STRAIGHT KEY

GKZ51M - STRAIGHT KEY
GKZ51M-BP (BULK PACK, 50PCS.)

SWITCH DIAGRAMS

N.B. SWITCHES SHOWN IN KEY-IN POSTION.

CONNECTOR PIN-OUTS

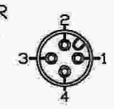


MALE 4

SWITCH TYPES 3 & 9

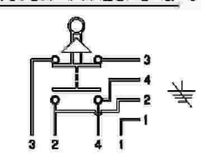

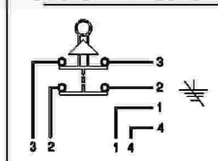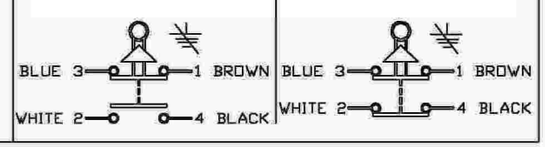
SWITCH TYPES 6 & 7