SIGN	DATE	DESCRIPTION	APPROVER
1	06/21'10	Color is Changed from (Ral 7035/D) to (RAL 7004/P)	Cheng Bo
2	06/21'10	The location post of Body is changed from spherical shape to cylindrical shape.	Aaron

THIS IS CAD DRAWING, DO NOT REVISE MANUALLY!!!

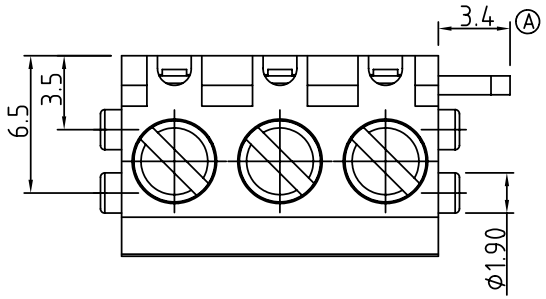

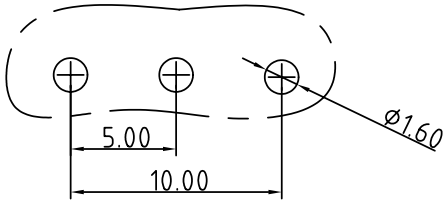

P.C.B LAYOUT

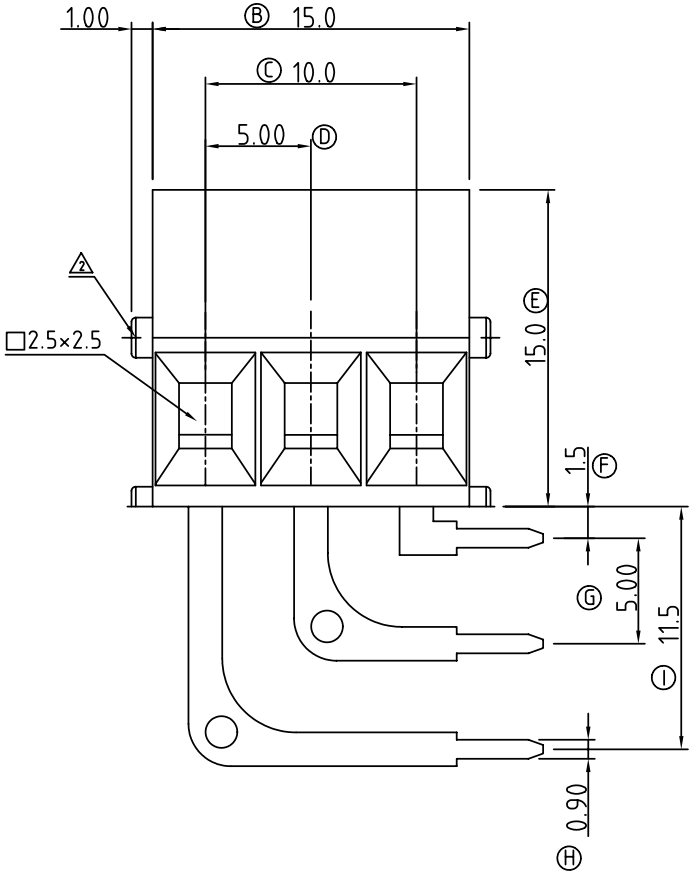

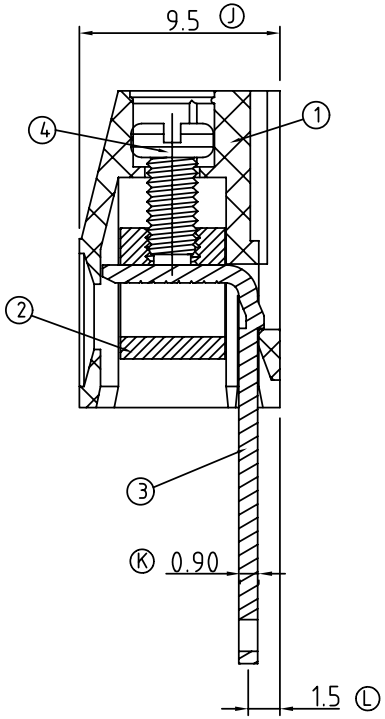

Material:

- Item 1 Terminal housing: Thermoplastic (UL 94V-0)
- Item 2 Clamp : Brass ,Ni plated
- Item 3 Wire guard solder pin : Brass , Tin plated
- Item 4 Terminal screw: Steel Zinc plating"-"slot type

Electrical

- Voltage rating: 300VAC
- Current rating: 10A
- Wire range:
- Solid wire(AWG): 12-22
- Stranded wire(AWG): 12-22
- Torque(Lb-In): 3.5
- Screw: M2.5
- Wire strip length: 6-7mm
- Withstanding Voltage: 1.6KV
- Operating temperature: -40°C to +115°C
- Soldering temperature: 250°C±10°C/5 Sec

V3 03 0 1 x 1 xxxx G

RoHS
Pb<40,000ppm

Color
0 Black (RAL9005)
2 Red (RAL3001/D)
3 Orange(RAL2011/P)
4 Yellow(RAL1018/A)
5 Green(RAL6018/T)
6 Blue (RAL5015/A)
1 8 Grey(RAL7004/P)

0000:"@"Logo (Standard)
000A:"ANYTEK"Logo
Any special item by customer request, please contact sales department.

ANYTEK

CUSTOMER COPY

ALL RIGHTS RESERVED. REPRODUCTION OR ISSUE TO THIRD PARTIES IN ANY FORM WHATEVER IS NOT PERMITTED WITHOUT WRITTEN AUTHORITY FROM THE PROPRIETOR. PROPERTY OF ANYTEK TECHNOLOGY CO., LTD

TITLE	V3-5.0 Series 3P (Right type)				
PART NO.	V30301x1xxxxG			DWG NO.	8V30002
APPROVED	CHECKED	DESIGNED	DRAWN	CUST NO.	
		Aaron 2010.08.25	Cheng Bo 2010.06.21	UNIT: mm	
				SCALE: NONE	
				SHEET: 01/01	REV.: F

Tolerance	
X.	±0.50
X.X	±0.30
X.XX	±0.10
X°	±1°