MICRO SWITCH
a Honeywell Division
FED. MFG. CODE 91929

SWITCH – ENCLOSED

CATALOG LISTING
1EN1–6

MILITARY STDS PART NO.
MS 24331–1

THIS DRAWING COVERS A PROPRIETARY ITEM AND IS THE PROPERTY OF MICRO SWITCH. A DIVISION OF HONEYWELL. THIS DRAWING IS NOT TO BE COPIED OR USED WITHOUT THE APPROVAL OF MICRO SWITCH

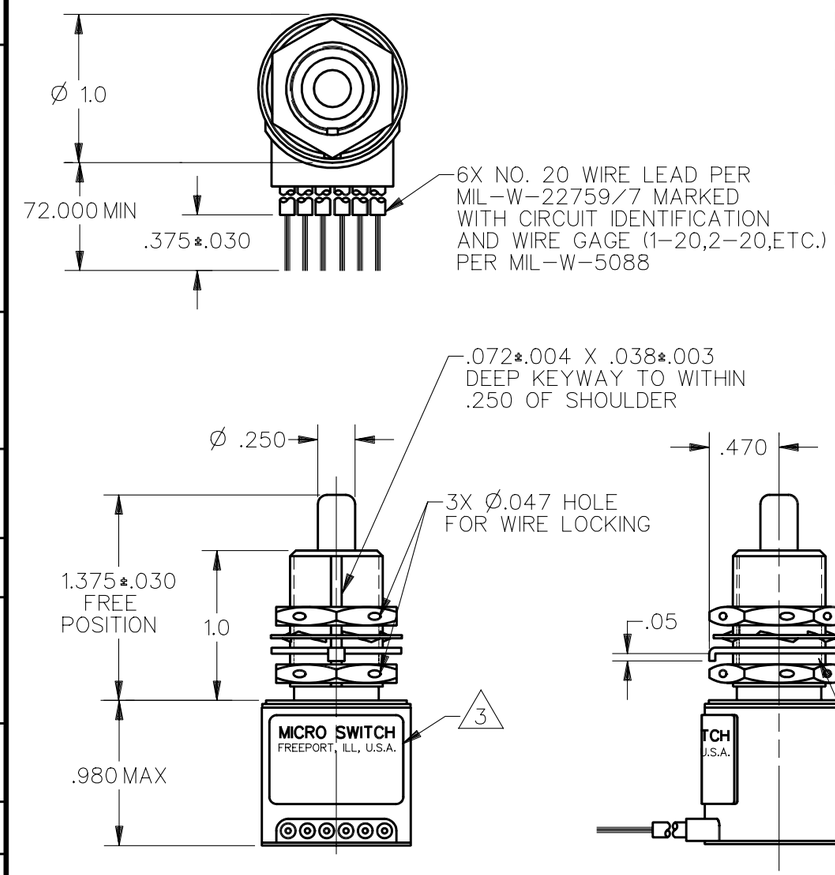

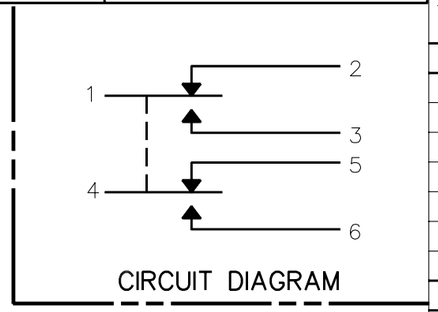

NOTES
1. LIFE RATINGS ARE PER MIL–S–8805 REQUIREMENTS. ACTUAL LIFE EXCEEDS RATED LIFE. CONTACT HONEYWELL–MICRO SWITCH FOR ADDITIONAL DATA
2. CONTACT HONEYWELL–MICRO SWITCH IF ADDITIONAL INFORMATION ON LOW ENERGY LOADS IS REQUIRED OR FOR HELP WITH SPECIFIC APPLICATIONS
3. CIRCUIT DIAGRAM, CATALOG LISTING, AND MILITARY STANDARD NO. MS 24331–1 ARE SHOWN ON NAMEPLATE
4. REPLACEMENT MOUNTING HARDWARE – PACKET 19PA8
5. APPLICATION INFORMATION ONLY
6. HARDWARE MAY BE PACKAGED UNASSEMBLED PER MIL–S–8805

ANSI Y14.5M–1982 APPLIES

SPECIFICATION DETAILS:	
STANDARD:	CONFORMS TO MS24331–1 (MIL–S–8805/40
CONSTRUCTION:	
ENCLOSURE DESIGN	RESILIENT SEAL PER MIL–S–8805, SYMBOL 4
CONTACT MATERIAL & CONFIGURATION	SMOOTH SILVER CONTACTS
CIRCUIT CONFIGURATION	2 SPDT
TERMINATION	LEADWIRE PER MIL–W–22759/7
WEIGHT	.46 LB
EXPOSED METALS	CORROSION RESISTANT STAINLESS STEEL
O–RING MATERIAL	SILICONE
ELECTRICAL CHARACTERISTICS:	

ELECTRICAL RATINGS	VOLTAGE	RESISTIVE	LOAD INDUCTIVE	MOTOR
–SEA LEVEL	28 VDC	4A	2A	4A
–50,000 FEET	28 VDC	4A	2A	4A 5

DIELECTRIC STRENGTH & INSULATION RES	DIELECTRIC STRENGTH (≈60 Hz FOR 5 SEC)	INSULATION RESISTANCE (500 VDC ± 10%)
–BETWEEN TERMINALS AND EXPOSED NON–CURRENT CARRYING METAL	1000V RMS, 500μ A (MAX LKG)	1000 MEGOHM MIN
–BETWEEN TERMINALS OF MUTUALLY INSULATED CIRCUITS	1000V RMS, 500μ A (MAX LKG)	1000 MEGOHM MIN
–BETWEEN ALL UNCONNECTED TERMINALS OF THE SAME POLE	1000V RMS, 500μ A (MAX LKG)	1000 MEGOHM MIN

SWITCH RESISTANCE	N/A
RECOMMENDATION OR USE IN APPL LESS THAN .5 amps AND/OR 12 volts	NO 2
MECHANICAL CHARACTERISTICS:	
COINCIDENCE OF OPERATING AND RELEASING POINTS	.010 OF PLUNGER TRAVEL
OPERATING FORCE	6–12 LBS
FULL OVERTRAVEL FORCE	30 LB MAX
RELEASE FORCE	4 LB MIN
PRETRAVEL	.040 MAX
DIFFERENTIAL TRAVEL	.020 MAX
OVERTRAVEL	.250 MIN
MOUNTING STRENGTH	15 IN–LBS
ACTUATOR STRENGTH	30 LBS APPLIES IN A DIRECTION TO CAUSE SWITCH ACTUATION
LIFE:	
MECHANICAL LIFE	25,000 MIN PER MIL–S–8805/40 1
ELECTRICAL LIFE AT FULL RATED LOAD	
ENVIRONMENTAL:	
TEMPERATURE RANGE	–55°C TO +85°C
ALTITUDE RANGE	SEA LEVEL TO 50,000 FT
SHOCK	PER MIL–S–8805 SYM M–100g
VIBRATION	PER MIL–S–8805 SYM 1–10–500 Hz & 10g PEAK
MOISTURE RESISTANCE	PER MIL–S–8805
THERMAL SHOCK	PER MIL–S–8805
SALT SPRAY	PER MIL–S–8805

THIRD ANGLE PROJECTION
SCALE FULL
DO NOT SCALE PRINT

UNLESS OTHERWISE SPECIFIED TOLERANCES ARE

ONE PLACE	(.0)	±.030
TWO PLACE	(.00)	±.015
THREE PLACE	(.000)	±.005
ANGLES		±

WEIGHT

CATALOG LISTING 1EN1–6
PAGE 1 OF 1
ISSUE M 37
REPLACES
RELEASE NO. SR–4675

REVISIONS
A CO 77504A LJF 15 MAR 94
B C083237 DLT 13 NOV 96

CHECK
CHECK 30MAR94 D A W
CHECK
DRAWN L J F 15MAR94
DDM/CAD