© – TE Connectivity. All Rights Reserved.

REVISIONS					
P	LTR	DESCRIPTION	DATE	DWN	APVD
	H	REVISED PER ECO-20-00132	05JUN2020	SB	JO

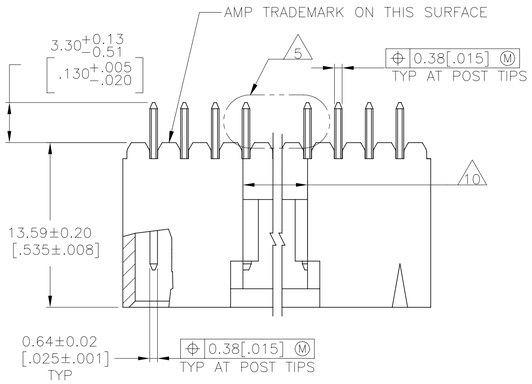

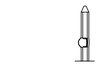

DETAIL Z
POST DETAIL TYP
2 POST MINIMUM

1. 0.00038[.000015] GOLD IN THE CONTACT AREA, 0.00254–0.00508[.000100–.000200] MATTE TIN–LEAD ON THE SOLDER TAIL, ALL OVER 0.00127[.000050] NICKEL
2. POINT OF MEASUREMENT FOR PLATING THICKNESS
3. THE NOTED DIMENSIONS APPLY FROM THE BASIC DIMENSION LINE (NOT THE POST CENTERLINE) TO THE SURFACE INDICATED
4. ONE POLARIZATION SLOT FOR 2 POSITION ASSEMBLY ONLY.
5. HOLD DOWN UNTIL SOLDERED, CONFIGURATION ACCEPTS 0.69–2.03[.027–.080] THICK PRINTED CIRCUIT BOARD (SEE DETAIL Z)
6. DIMENSIONS NOTED ARE FOR SOLDER STENCIL LAYOUT FOR USE WITH 1.57±0.20[.062±.008] THICK PRINTED CIRCUIT BOARDS.
7. PARTS ARE PACKAGED IN GANG OF TUBES
8. 0.00038[.000015] GOLD IN THE CONTACT AREA, 0.00254–0.00508[.000100–.000200] MATTE TIN ON THE SOLDER TAIL, ALL OVER 0.00127[.000050] NICKEL
9. OBSOLETE PARTS: OBSOLETE CIS STREAMLINING PER D.RENAUD/D.SINISI
10. 0.25 [.010] RECESS PERMISSIBLE IN THIS AREA FOR MOLD SHUT OFF

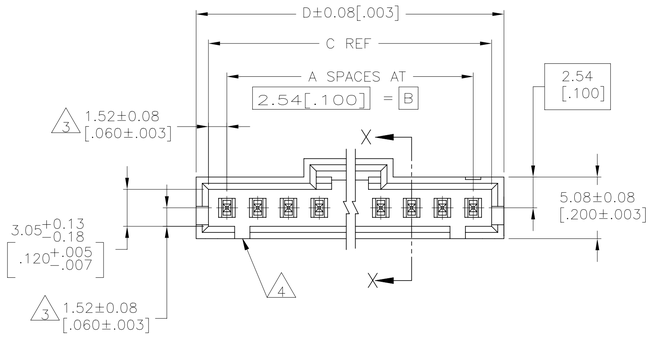

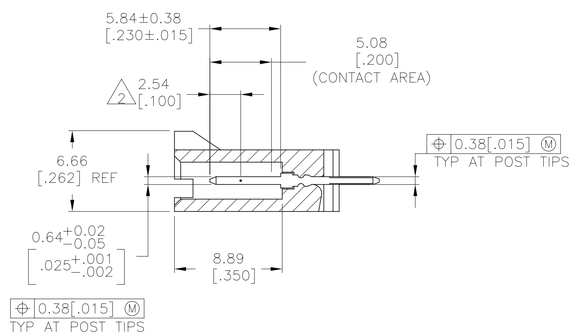

SECTION X–X

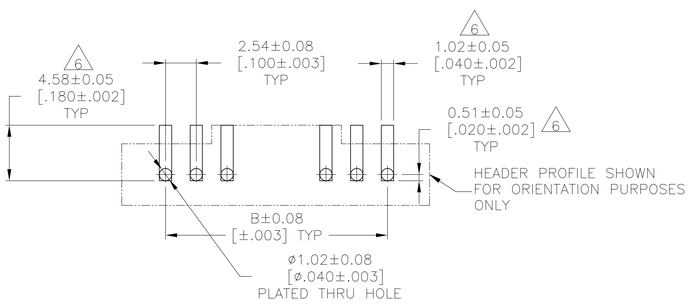

RECOMMENDED PC BOARD MOUNTING DIMENSIONS
RECOMMENDED STENCIL THICKNESS = 0.25[.010]

		PLATING	D	C	B	A	NO. OF POSN	PART NUMBER
8			65.91 [2.595]	64.01 [2.520]	60.96 [2.400]	24	25	7–104909–4
8			63.37 [2.495]	61.47 [2.420]	58.42 [2.300]	23	24	7–104909–3
8			60.83 [2.395]	58.93 [2.320]	55.88 [2.200]	22	23	7–104909–2
8			58.29 [2.295]	56.39 [2.220]	53.34 [2.100]	21	22	7–104909–1
8			55.75 [2.195]	53.85 [2.120]	50.80 [2.000]	20	21	7–104909–0
8			53.21 [2.095]	51.31 [2.020]	48.26 [1.900]	19	20	6–104909–9
8			50.67 [1.995]	48.77 [1.920]	45.72 [1.800]	18	19	6–104909–8
8			48.13 [1.895]	46.23 [1.820]	43.18 [1.700]	17	18	6–104909–7
8			45.59 [1.795]	43.69 [1.720]	40.64 [1.600]	16	17	6–104909–6
8			43.05 [1.695]	41.15 [1.620]	38.1 [1.500]	15	16	6–104909–5
8			40.51 [1.595]	38.61 [1.520]	35.56 [1.400]	14	15	6–104909–4
8			37.97 [1.495]	36.07 [1.420]	33.02 [1.300]	13	14	6–104909–3
8			35.43 [1.395]	33.53 [1.320]	30.48 [1.200]	12	13	6–104909–2
9	SUPERCEDED		1	65.91 [2.595]	64.01 [2.520]	60.96 [2.400]	24	25	~~2–104909–4~~
9	SUPERCEDED		1	63.37 [2.495]	61.47 [2.420]	58.42 [2.300]	23	24	~~2–104909–3~~
9	OBSOLETE		1	60.83 [2.395]	58.93 [2.320]	55.88 [2.200]	22	23	~~2–104909–2~~
9	SUPERCEDED		1	58.29 [2.295]	56.39 [2.220]	53.34 [2.100]	21	22	~~2–104909–1~~
9	SUPERCEDED		1	55.75 [2.195]	53.85 [2.120]	50.80 [2.000]	20	21	~~2–104909–0~~
9	SUPERCEDED		1	53.21 [2.095]	51.31 [2.020]	48.26 [1.900]	19	20	~~1–104909–9~~
9	SUPERCEDED		1	50.67 [1.995]	48.77 [1.920]	45.72 [1.800]	18	19	~~1–104909–8~~
9	SUPERCEDED		1	48.13 [1.895]	46.23 [1.820]	43.18 [1.700]	17	18	1–104909–7
9	SUPERCEDED		1	45.59 [1.795]	43.69 [1.720]	40.64 [1.600]	16	17	~~1–104909–6~~
9	SUPERCEDED		1	43.05 [1.695]	41.15 [1.620]	38.1 [1.500]	15	16	~~1–104909–5~~
9	SUPERCEDED		1	40.51 [1.595]	38.61 [1.520]	35.56 [1.400]	14	15	1–104909–4
9	SUPERCEDED		1	37.97 [1.495]	36.07 [1.420]	33.02 [1.300]	13	14	~~1–104909–3~~
9	SUPERCEDED		1	35.43 [1.395]	33.53 [1.320]	30.48 [1.200]	12	13	1–104909–2

THIS DRAWING IS A CONTROLLED DOCUMENT.

DIMENSIONS: mm [INCHES]

TOLERANCES UNLESS OTHERWISE SPECIFIED:
0 PLC ± –
1 PLC ± –
2 PLC ± 0.13[.005]
3 PLC ± –
4 PLC ± –
ANGLES ± –

MATERIAL: HOUSIG: LCP, COLOR: BLACK, POSTS: BRASS

FINISH: SEE TABLE

DWN: E. BRANDBERG –
CHK: J. GESFORD 13–10–94
APVD: D. DUPLER 13–10–94
PRODUCT SPEC: —
APPLICATION SPEC: —
WEIGHT: —

TE Connectivity

NAME: HEADER ASSY, AMPMODU MTE, VERTICAL SINGLE ROW, 2.54[.100] C/L, 0.64[.025] SQ POSTS, POLARIZED,WITH LATCHING & HOLD DOWN, HIGH TEMP

SIZE A1 | CAGE CODE 00779 | DRAWING NO C–104909 | RESTRICTED TO —

CUSTOMER DRAWING | SCALE 4:1 | SHEET 1 OF 1 | REV H

4805 (1/15)