THIS DRAWING IS UNPUBLISHED. RELEASED FOR PUBLICATION -.-.
© COPYRIGHT - By - ALL RIGHTS RESERVED.

REVISIONS					
P.	LTR	DESCRIPTION	DATE	DWN	APVD
	V3	PART STATUS UPATED IN PART LIST TABLE	15FEB2018	SD	PS

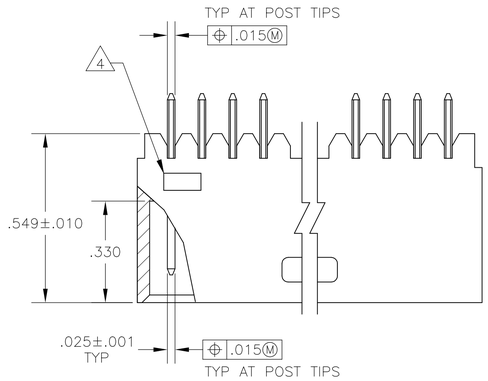

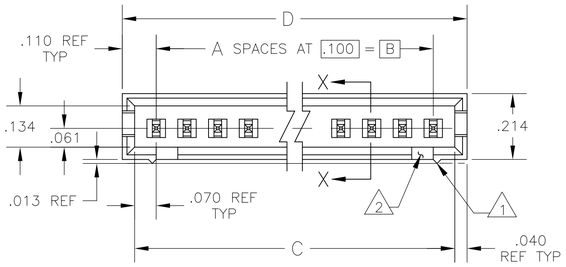

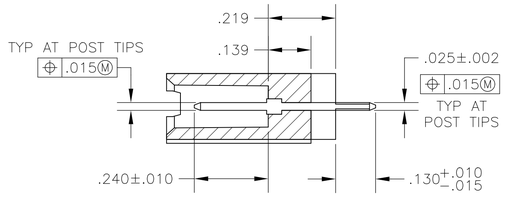

SECTION X—X

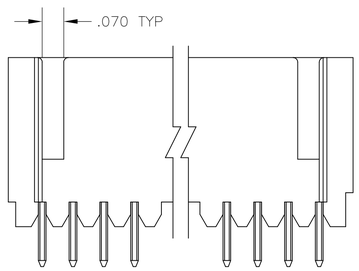

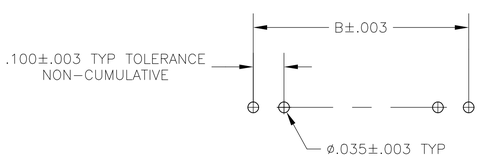

RECOMMENDED HOLE LAYOUT

1. STANDOFFS:
   UP TO 9 POS—(2 REQD) ON THE OUTSIDE ENDS OF THE HOUSING.
   10 TO 19 POS—(3 REQD) TWO ON THE OUTSIDE ENDS AND ONE CENTERED ON THE HOUSING.

   19 POS AND ABOVE—(4 REQD) TWO ON THE OUTSIDE ENDS AND TWO SPACED EVENLY WITHIN THE REMAINING LENGTH OF THE HOUSING.
2. FOR 3 POS. ONLY, ONE SLOT (.215 WIDE).
3. INDICATED PARTS ARE PACKAGED IN "GANG-OF-TUBES".
4. RECESSED DATE CODE
5. .000100—.000200 BRIGHT TIN—LEAD OVER .000050 NICKEL.
6. .000100—.000200 BRIGHT TIN OVER .000050 NICKEL.
7. PRELIMINARY PART
8. .000100—.000200 MATTE TIN OVER .000050 NICKEL.
9. OBSOLETE PARTS: OBSOLETE CIS STREAMLINING PER D.RENAUD/D.SINISI

	FINISH	D	C	B	A	NO OF POS	ASSEMBLY PART NUMBER
OBSOLETE 9	8	2.620	2.540	2.400	24	25	7—103080—3
	8	2.520	2.440	2.300	23	24	7—103080—2
	8	2.420	2.340	2.200	22	23	7—103080—1
	8	2.320	2.240	2.100	21	22	7—103080—0
	8	2.220	2.140	2.000	20	21	6—103080—9
	8	2.120	2.040	1.900	19	20	6—103080—8
	8	2.020	1.940	1.800	18	19	6—103080—7
	8	1.920	1.840	1.700	17	18	6—103080—6
	8	1.820	1.740	1.600	16	17	6—103080—5
	8	1.720	1.640	1.500	15	16	6—103080—4
	8	1.620	1.540	1.400	14	15	6—103080—3
	8	1.520	1.440	1.300	13	14	6—103080—2
	8	1.420	1.340	1.200	12	13	6—103080—1
	8	1.320	1.240	1.100	11	12	6—103080—0
	8	1.220	1.140	1.000	10	11	5—103080—9
	8	1.120	1.040	.900	9	10	5—103080—8
	8	1.020	.940	.800	8	9	5—103080—7
	8	.920	.840	.700	7	8	5—103080—6
	8	.820	.740	.600	6	7	5—103080—5
	8	.720	.640	.500	5	6	5—103080—4
	8	.620	.540	.400	4	5	5—103080—3
	8	.520	.440	.300	3	4	5—103080—2
	8	.420	.340	.200	2	3	5—103080—1
7 OBSOLETE	6	1.020	.940	.800	8	9	~~4—103080—0~~
7	6	.520	.440	.300	3	4	3—103080—9
7 OBSOLETE	6	.420	.340	.200	2	3	~~3—103080—8~~
	6	.520	.440	.300	3	4	3—103080—7
7 OBSOLETE	6	.620	.540	.400	4	5	3—103080—6
3 OBSOLETE	5	.620	.540	.400	4	5	3—103080—5
OBSOLETE	5	3.820	3.640	3.500	35	36	3—103080—4
OBSOLETE	5	3.720	3.540	3.400	34	35	3— —3
OBSOLETE	5	3.620	3.440	3.300	33	34	3— —2
OBSOLETE	5	3.420	3.340	3.200	32	33	3— —1
OBSOLETE	5	3.320	3.240	3.100	31	32	3— —0
OBSOLETE	5	3.220	3.140	3.000	30	31	2— —9
OBSOLETE	5	3.120	3.040	2.900	29	30	2— —8
OBSOLETE	5	3.020	2.940	2.800	28	29	2— —7
OBSOLETE	5	2.920	2.840	2.700	27	28	2— —6
OBSOLETE	5	2.820	2.740	2.600	26	27	2— —5
OBSOLETE	5	2.720	2.640	2.500	25	26	2— —4
OBSOLETE 9	5	2.620	2.540	2.400	24	25	2— —3
	5	2.520	2.440	2.300	23	24	2— —2
	5	2.420	2.340	2.200	22	23	2— —1
	5	2.320	2.240	2.100	21	22	2— —0
	5	2.220	2.140	2.000	20	21	1— —9
	5	2.120	2.040	1.900	19	20	1— —8
	5	2.020	1.940	1.800	18	19	1— —7
	5	1.920	1.840	1.700	17	18	1— —6
	5	1.820	1.740	1.600	16	17	1— —5
	5	1.720	1.640	1.500	15	16	1— —4
9 OBSOLETE	5	1.620	1.540	1.400	14	15	~~1— —3~~
	5	1.520	1.440	1.300	13	14	1— —2
	5	1.420	1.340	1.200	12	13	1— —1
	5	1.320	1.240	1.100	11	12	1— —0
	5	1.220	1.140	1.000	10	11	—9
	5	1.120	1.040	.900	9	10	—8
	5	1.020	.940	.800	8	9	—7
	5	.920	.840	.700	7	8	—6
	5	.820	.740	.600	6	7	—5
	5	.720	.640	.500	5	6	—4
	5	.620	.540	.400	4	5	—3
	5	.520	.440	.300	3	4	—2
	5	.420	.340	.200	2	3	103080—1

THIS DRAWING IS A CONTROLLED DOCUMENT.

DIMENSIONS: INCHES

TOLERANCES UNLESS OTHERWISE SPECIFIED:
0 PLC ± –
1 PLC ± –
2 PLC ± .02
3 PLC ± .005
4 PLC ± –
ANGLES ± –

MATERIAL: RETARDANT THERMOPLASTIC, COLOR—BLACK
POSTS—BRASS

FINISH: SEE TABLE

DWN J. MARTINELLI 17AUG92
CHK – –
APVD H. PALEY 21AUG92
PRODUCT SPEC –
APPLICATION SPEC –
WEIGHT –

TE Connectivity

NAME: ASSEMBLY, MOD II, SINGLE ROW, .100 C/L, (4) SIDED SHROUD

SIZE A1 | CAGE CODE 00779 | DRAWING NO C-103080 | RESTRICTED TO –

CUSTOMER DRAWING | SCALE 4:1 | SHEET 1 OF 1 | REV V3

4805 (1/15)