Jan.1.2022 Copyright 2022 HIROSE ELECTRIC CO., LTD. All Rights Reserved.
In case of consideration for using Automotive equipment / device which demand high reliability, kindly contact our sales window correspondents.

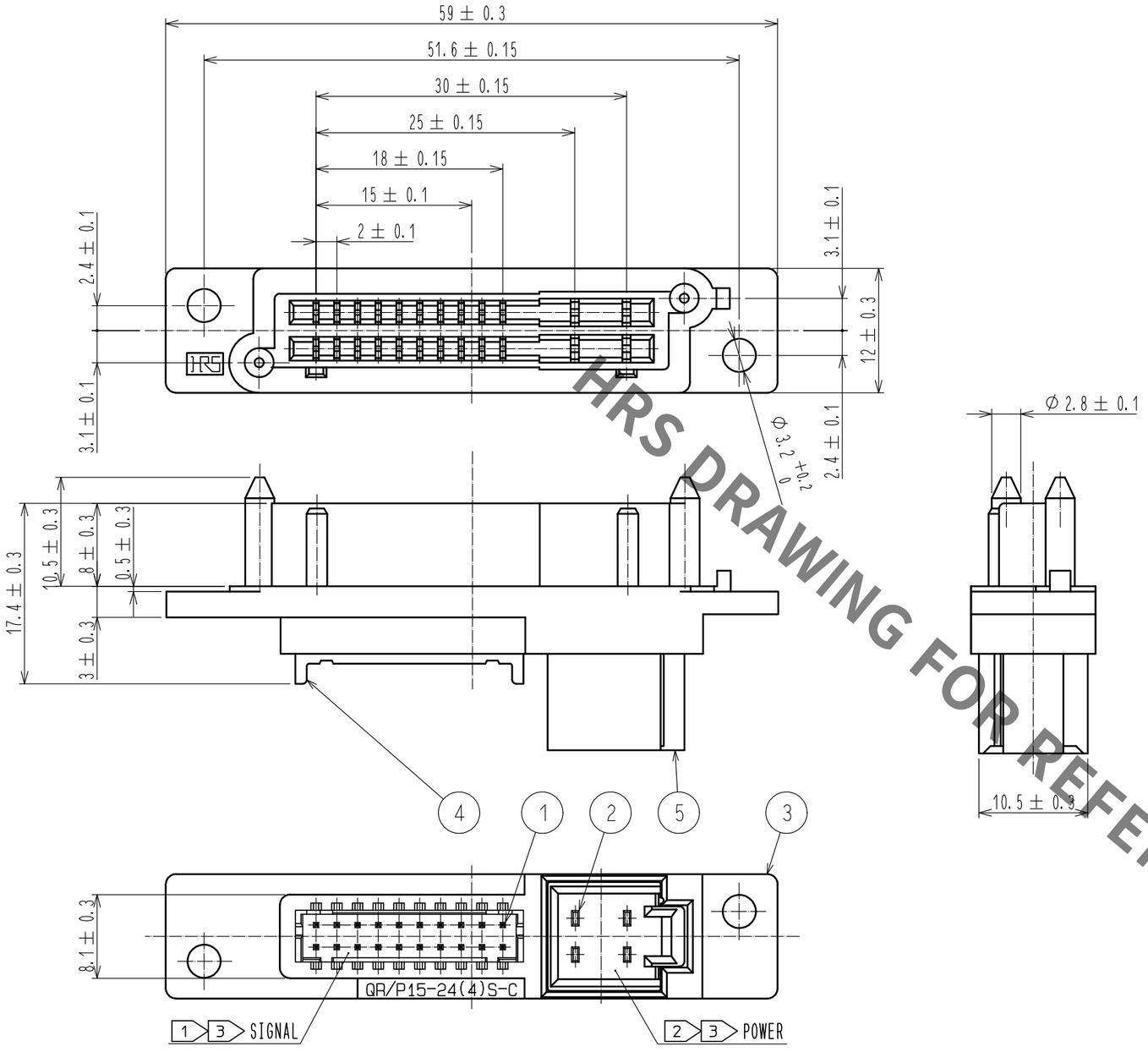

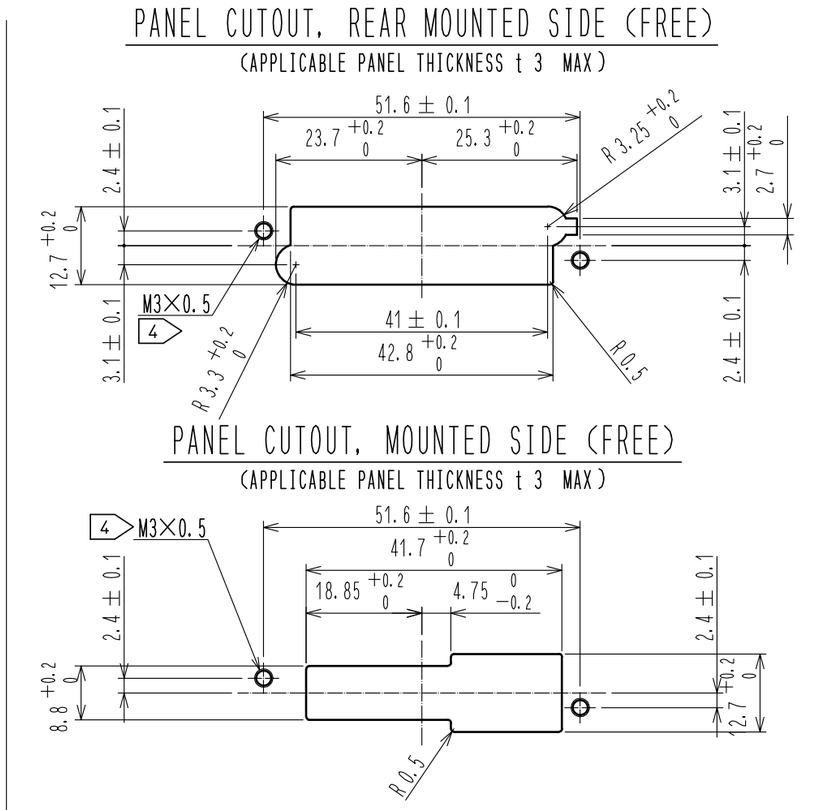

MATED DRAWING

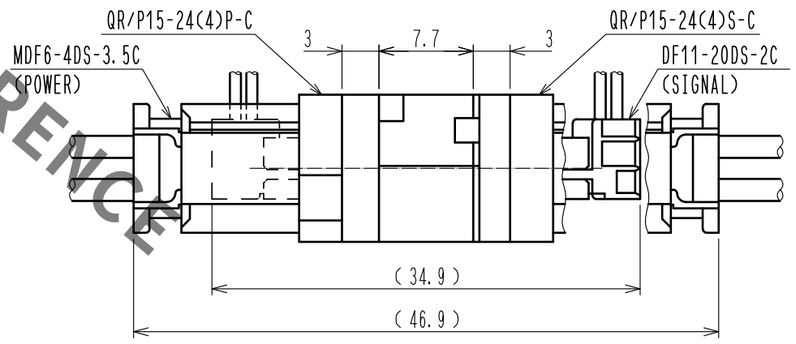

NOTES. 1 DF11-20DS-2C (CL543-0509-7) ASSEMBLED WITH DF11(※TABLE-1., GOLD PLATING CONTACT) CAN BE MATED AT THIS PORTION.
2 MDF6-4DS-3.5C (CL547-0074-1) ASSEMBLED WITH MDF6(※TABLE-2., TIN REFLOW PLATING CONTACT) CAN BE MATED AT THIS PORTION.

※TABLE-1.

PART No.	CODE No.
DF11-22SCA	CL543-0604-8
DF11-2428SCA	CL543-0551-3
DF11-30SCA	CL543-0608-9

※TABLE-2.

PART No.	CODE No.
MDF6-1618SC	CL547-0071-3
MDF6-2022SC	CL547-0073-9

3 REFER TO ATAD-E2828 FOR CONNECTOR LINE ARRANGEMENT WHEN MATED.
4 EFFECTIVE SCREW AREA SHALL BE 1.5 mm MIN.

NO.	MATERIAL	FINISH , REMARKS	NO.	MATERIAL	FINISH , REMARKS
2	Phosphor Bronze	Contact area: gold plating 0.2μm min Lead area:tin reflow plating 1μm min Under: nickel plating 1μm min			
1	Phosphor Bronze	Contact area: gold plating 0.2μm min Lead area: gold plating 0.2μm min Under: nickel plating 0.8μm min	5	Polyamide	White, UL94V-0
			4	Polyamide	Black, UL94V-0
			3	Polybutylene Terephthalate	Black, UL94V-0

UNITS	SCALE	COUNT	DESCRIPTION OF REVISIONS	DESIGNED	CHECKED	DATE
mm	2:1	0				

HIROSE ELECTRIC CO., LTD.

APPROVED	: MN. KENJO	20200403	DRAWING NO.	EDC-120410-70-00
CHECKED	: TU. TANIGUCHI	20200403	PART NO.	QR/P15-24(4)S-C(70)
DESIGNED	: KIM JAEHYEON	20200403	CODE NO.	CL221-0250-5-70
DRAWN	: DS. HIROWATARI	20200403		0 1/1

HRS DRAWING FOR REFERENCE