SIGN	DATE	DESCRIPTION	APPROVER
1	04/25`11	Material is changed	Chen Bo

THIS IS CAD DRAWING, DO NOT REVISE MANUALLY!!!

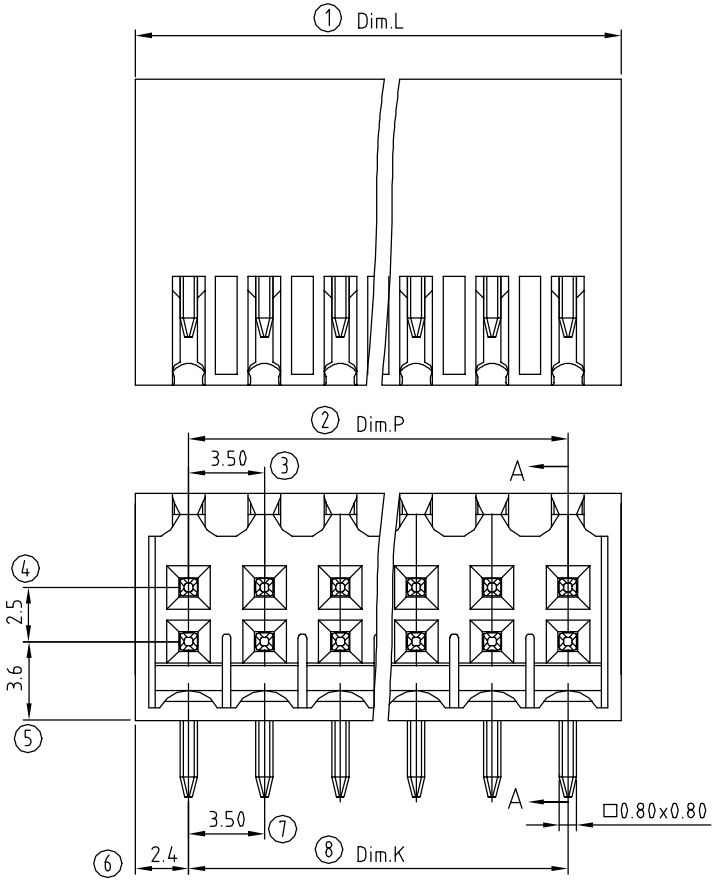

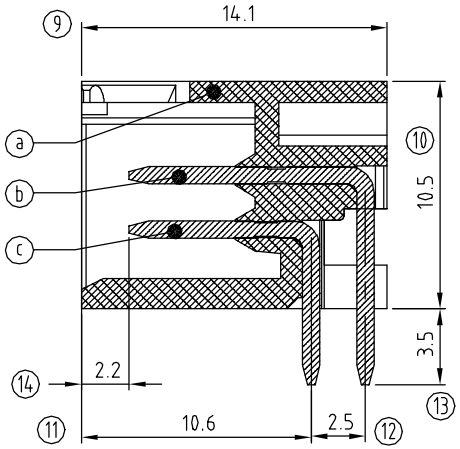

SECTION A-A

Material:

- Item ⓐ Terminal housing: PA66 (UL94V-0)
- Item ⓑ Male contact long pin: Brass ,Tin plated
- Item ⓒ Male contact short pin: Brass ,Tin plated

Electrical:	cULus
Voltage rating:	150V
Current rating:	7 A
Withstanding Voltage:	1.3KV
Operating temperature:	-40°C to +115°C
Soldering temperature:	250°C±10°C/5 Sec
Safety Approval:	

V X xx 1 1 x 1 xxxx G

NO of plose

04	2x2 CONTACTS
06	3x2 CONTACTS
...	...
48	24x2 CONTACTS

0	Black
3	Orange
5	Green
6	Blue
8	Grey

0000 Standard @ Logo
000A Standard ANY Logo
Any special item by customer request, please contact sales department.

RoHS
Pb<40,000ppm

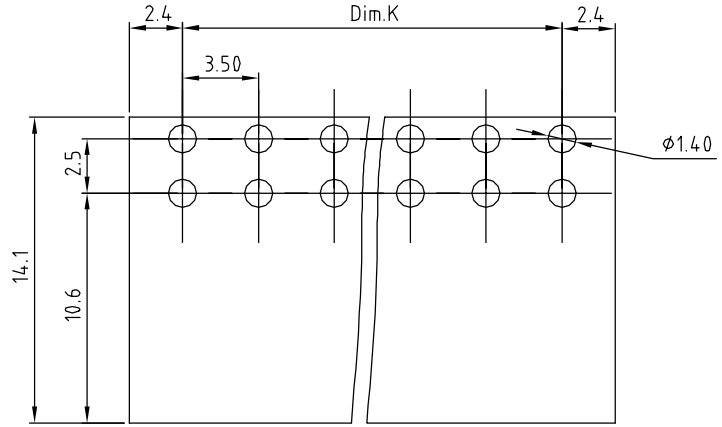

P.C.B Layout

DimL=(N/2-1)×3.5+4.9	
DimP=(N/2-1)×3.5	
DimK=(N/2-1)×3.5	

N=Number of poles

POLES \ Tol \ Dim.	Dim.L	Dim.P
2x2p-2x6p	±0.15	±0.10
2x7p-2x12p	±0.25	±0.20
2x13p-2x18p	±0.35	±0.30
2x19p-2x24p	±0.40	±0.35

ANYTEK

INSPECTION COPY

ALL RIGHTS RESERVED. REPRODUCTION OR ISSUE TO THIRD PARTIES IN ANY FORM WHATEVER IS NOT PERMITTED WITHOUT WRITTEN AUTHORITY FROM THE PROPRIETOR. PROPERTY OF ANYTEK TECHNOLOGY CO., LTD

TITLE	VX 3.5mm Series Close type Right-angle				
PART NO.	VXxx11x1xxxxG			DWG NO.	8VX0002
APPROVED	CHECKED	DESIGNED	DRAWN	CUST NO.	
		Runner 2011.04.25	Chen Bo 2011.04.25	UNIT: mm / SCALE: NONE / SHEET: 01/01	REV.: C

Tolerance	
X.	±0.50
X.X	±0.30
X.XX	±0.10
X°	±1°