ROHS COMPLIANT

# PRODUCT DATA DRAWING

| REVISION HISTORY | | | |
|---|---|---|---|
| REV | DESCRIPTION | DATE | APPROVED |
| - | DCN 45425 | 05/17 | GPF |
| | | | |
| | | | |

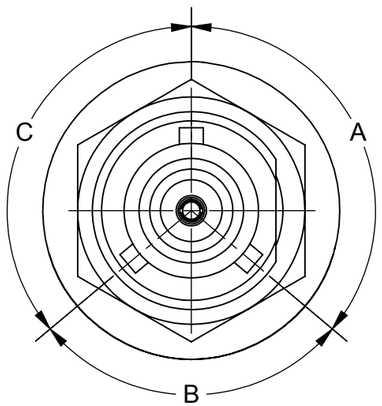


FIGURE 2

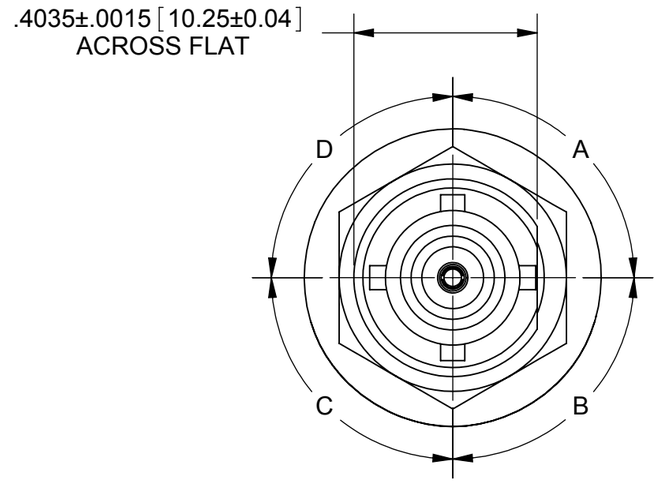


FIGURE 1

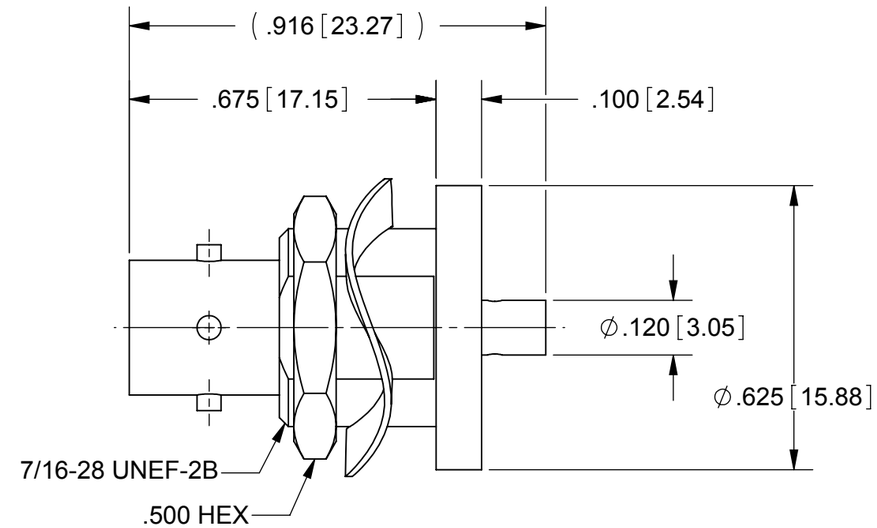


## MATERIAL:

| | |
|---|---|
| BODY, & HEX NUT: | STAINLESS STEEL PER AMS-5640, ALLOY UNS S30300, TYPE 1 |
| CONTACTS: | BERYLLIUM COPPER PER ASTM B196, ALLOY No. UNS C17300, TD04 |
| FERRULE: | BRASS PER ASTM B16, ALLOY UNS No. C36000 |
| WAVE WASHER: | 1050 SPRING STEEL X .015 THICK |
| INSULATOR: | PTFE PER ASTM D1710, TYPE I, GRADE 1, CLASS B |
| GASKET: | CHOMERICS 1287 |

## FINISH:

| | |
|---|---|
| BODY & HEX NUT: | PASSIVATED PER AMS-2700, TYPE 2 |
| FERRULE, & CONTACTS: | GOLD PER ASTM B488, TYPE II, CODE C, CLASS 1.27; OVER NICKEL PER AMS-QQ-N-290, CLASS 1, .00005" MIN. |
| WAVE WASHER: | NICKEL PER AMS-QQ-N-290, CLASS 1, GRADE G |

## PERFORMANCE:

| | |
|---|---|
| IMPEDANCE: | 50 OHMS |
| FREQ. RANGE: | DC TO 18 GHz |

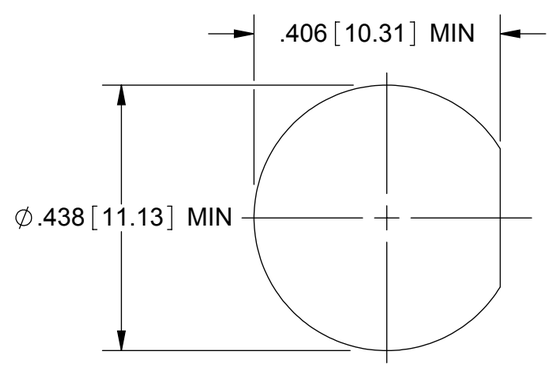


RECOMMENDED MOUNTING HOLE

| PART NUMBER | FIGURE | A | B | C | D |
|---|---|---|---|---|---|
| SF8721-60109 | 1 | 90° | 90° | 90° | 90° |
| SF8721-60110 | 2 | 130° | 100° | 130° | - |
| SF8721-60111 | 2 | 110° | 140° | 110° | - |
| SF8721-60112 | 2 | 120° | 120° | 120° | - |

MATERIAL: SEE NOTES

FINISH: SEE NOTES

SURFACE AREA: N/A

**PROPRIETARY**

THE INFORMATION CONTAINED IN THIS DRAWING IS THE SOLE PROPERTY OF SV MICROWAVE, INC. ANY REPRODUCTION IN PART OR AS A WHOLE WITHOUT THE WRITTEN PERMISSION OF SV MICROWAVE, INC IS PROHIBITED.

DIMENSIONS ARE IN INCHES TOLERANCES:

FRACTIONAL: ±1/64 ANGULAR: X° ±1°0' X°X' ±15'

DECIMAL: .X ±.030 .XX ±.010 .XXX ±.005

INTERPRET DIMENSIONS AND TOLERANCES PER ASME Y14.5M - 1994

THIRD ANGLE PROJECTION

UNLESS OTHERWISE SPECIFIED

1) ALL DIMENSIONS ARE IN INCHES [MILLIMETERS]
2) ALL DIMENSIONS ARE AFTER PLATING.
3) BREAK CORNERS & EDGES .005 R. MAX.
4) CHAM. 1ST & LAST THREADS.
5) SURFACE ROUGHNESS 63 MIL-STD-10.
6) DIA.'S ON COMMON CENTERS TO BE CONCENTRIC WITHIN .005 T.I.R.
7) REMOVE ALL BURRS

| | | |
|---|---|---|
| DRAWN: | VB | 05/09/17 |
| CHECKED: | GPF | 05/09/17 |
| APPROVED: | GPF | 05/09/17 |

***SV Microwave, Inc.***

www.svmicrowave.com

TITLE: ZMA STRAIGHT BULKHEAD JACK FOR RG-405 CABLE

SIZE B

DWG. NO. SF8721-60109-60112

SCALE: 4:1

SHEET 1 OF 1