Process Capable

RoHS Compliant 2011/65/EU

Compliant Halogen Free

REV.	ECN NO.	DESCRIPTION	DATE	DESIGN

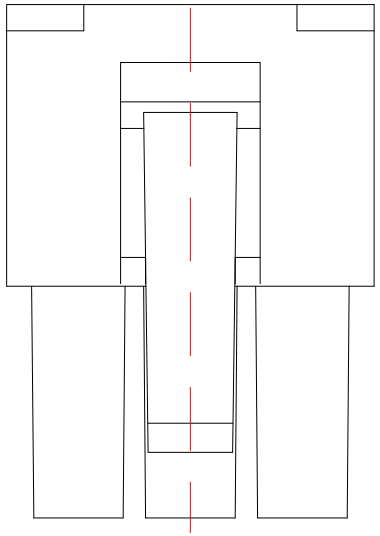

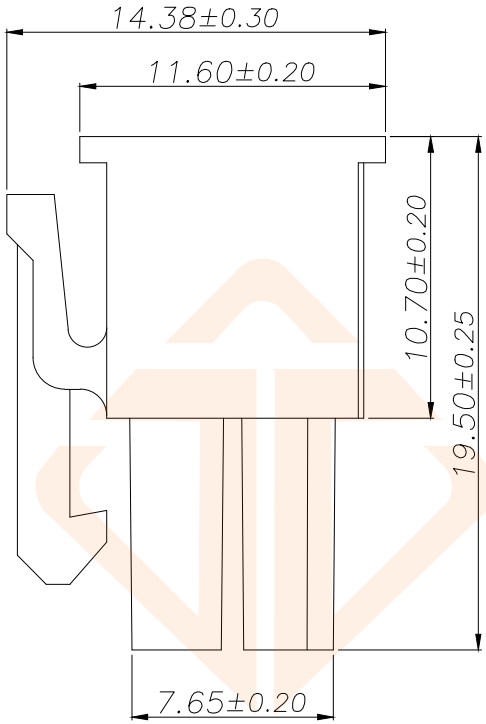

技术指标:

1.温度范围: −25°C~85°C.
2.额定电压: 250V AC,DC.
3.耐电压: 1500V AC/minute.
4.接触电阻:≤20mΩ .
5.绝缘电阻:≥1000MΩ.
6.额定电流: 5A AC,DC.

型号	CKT	A	B
C420E12−Y2P12	2*1	0.00	5.50
C420E12−Y4P12	2*2	4.20	9.70
C420E12−Y6P12	2*3	8.40	13.90
C420E12−Y8P12	2*4	12.60	18.10
C420E12−Y10P12	2*5	16.80	22.30
C420E12−Y12P12	2*6	21.00	26.50
C420E12−Y14P12	2*7	25.20	30.70
C420E12−Y16P12	2*8	29.40	34.90
C420E12−Y18P12	2*9	33.40	39.10
C420E12−Y20P12	2*10	37.80	43.30
C420E12−Y22P12	2*11	42.00	47.50
C420E12−Y24P12	2*12	46.20	51.70

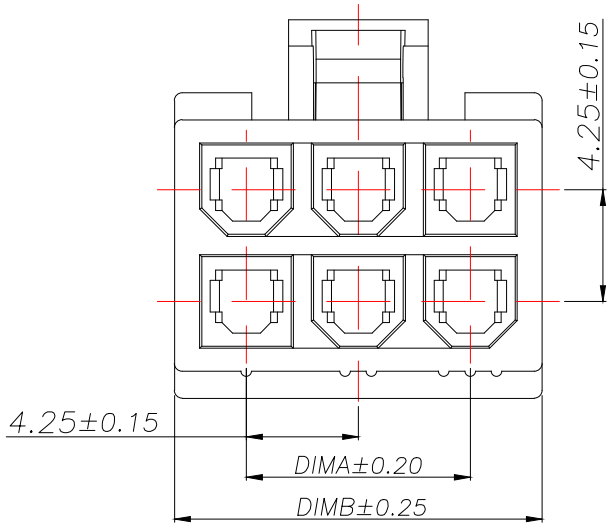

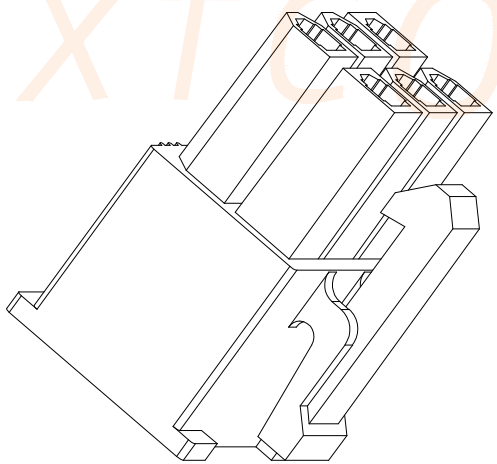

JXTCONN

TOLERANCE			
X.X ±0.30	X.° ±5°		
.XX ±0.25	X.X° ±1°		
.XXX ±0.15			
UNITS	mm		
MATERILA	— — —		
FINISH	— — —		

深圳聚兴泰电子科技有限公司
Shenzhen Juxingtai Electronic Technology Co., Ltd

PART NO. C420E12−YXP12		TITLE: WBM4.2MM HOUSING	
DESIGN: Ethan		MANUFACTURE DWG	
CHED: Olvia		SCALE N:A	SHEET 1/1
APPD: Ava			