THIS DRAWING IS UNPUBLISHED. RELEASED FOR PUBLICATION 20
© COPYRIGHT 20 BY - ALL RIGHTS RESERVED.

REVISIONS

| P | LTR | DESCRIPTION | DATE | DWN | APVD |
|---|---|---|---|---|---|
| | 1 | INITIAL RELEASED | 27MAR2022 | S.Y | E.J |
| | 2 | ECN-22-146320 | 29MAR2022 | S.Y | E.J |
| | A | ECN-22-166763 | 15JUL2022 | S.Y | E.J |
| | A1 | ECN-22-172947 | 05SEP2022 | S.Y | E.J |

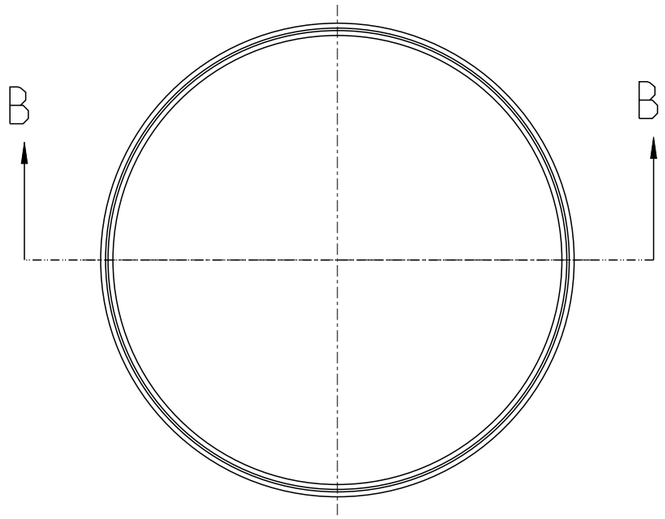


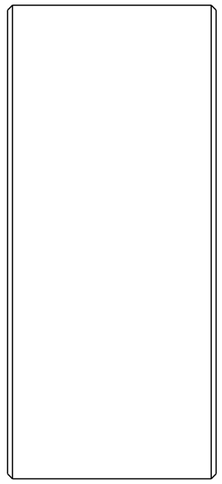

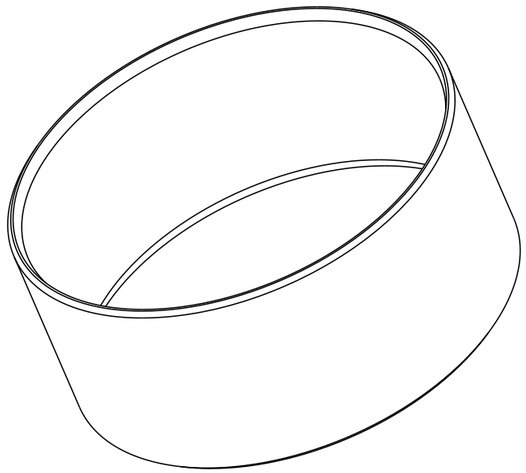

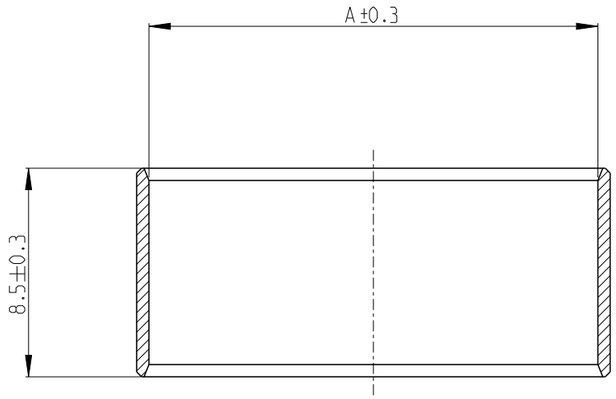


SECTION B-B

1 IN CASE OF DISCREPANCIES BETWEEN GERMAN AND ENGLISH TEXT THE GERMAN TEXT IS BINDING

2 PACKING: BULK PACKAGING IN CORRUGATED SHIPPING BOX

3 USED ON 2 POS, HV, REC HSG

| TE PN | A | WEIGHT(g) | MATERIAL | FINISH | DESCRIPTION | CABLE DIAM. |
|---|---|---|---|---|---|---|
| 2400922-4 | 12.4 | 2.0 | STEEL | - | 25mm² INNER FERRULE | 11.6~12.2MM |
| 2400922-3 | 18.3 | 2.3 | | | 70mm² INNER FERRULE | 17.4~18.2MM |
| 2400922-2 | 15.9 | 2.2 | | | 50mm² INNER FERRULE | 15.2~15.8MM |
| 2400922-1 | 14.5 | 2.1 | | | 35mm² INNER FERRULE | 13.8~14.4MM |

THIS DRAWING IS A CONTROLLED DOCUMENT.

DIMENSIONS: mm

TOLERANCES UNLESS OTHERWISE SPECIFIED:

| | |
|---|---|
| 0 PLC | ±- |
| 1 PLC | ±0.1 |
| 2 PLC | ±0.01 |
| 3 PLC | ±0.001 |
| 4 PLC | ±0.0001 |
| ANGLES | ±- |

MATERIAL -

FINISH -

DWN S.YANG 30MAR2022
CHK F.MA 30MAR2022
APVD F.JIANG 30MAR2022
PRODUCT SPEC 108-160494
APPLICATION SPEC 114-160272
WEIGHT -

TE Connectivity

NAME HVCSJ1800 PLUG 180DEG INNER FERRULE
-

| SIZE | CAGE CODE | DRAWING NO | RESTRICTED TO |
|---|---|---|---|
| A3 | 00779 | C-2400922 | - |

CUSTOMER DRAWING | SCALE 5:1 | SHEET 1 OF 1 | REV A1

1470-19 (3/13)